Ned. Ver. v. Historie v/d Radio
ARCHIEF
DOCUMENTATIEDIENST
NVHR
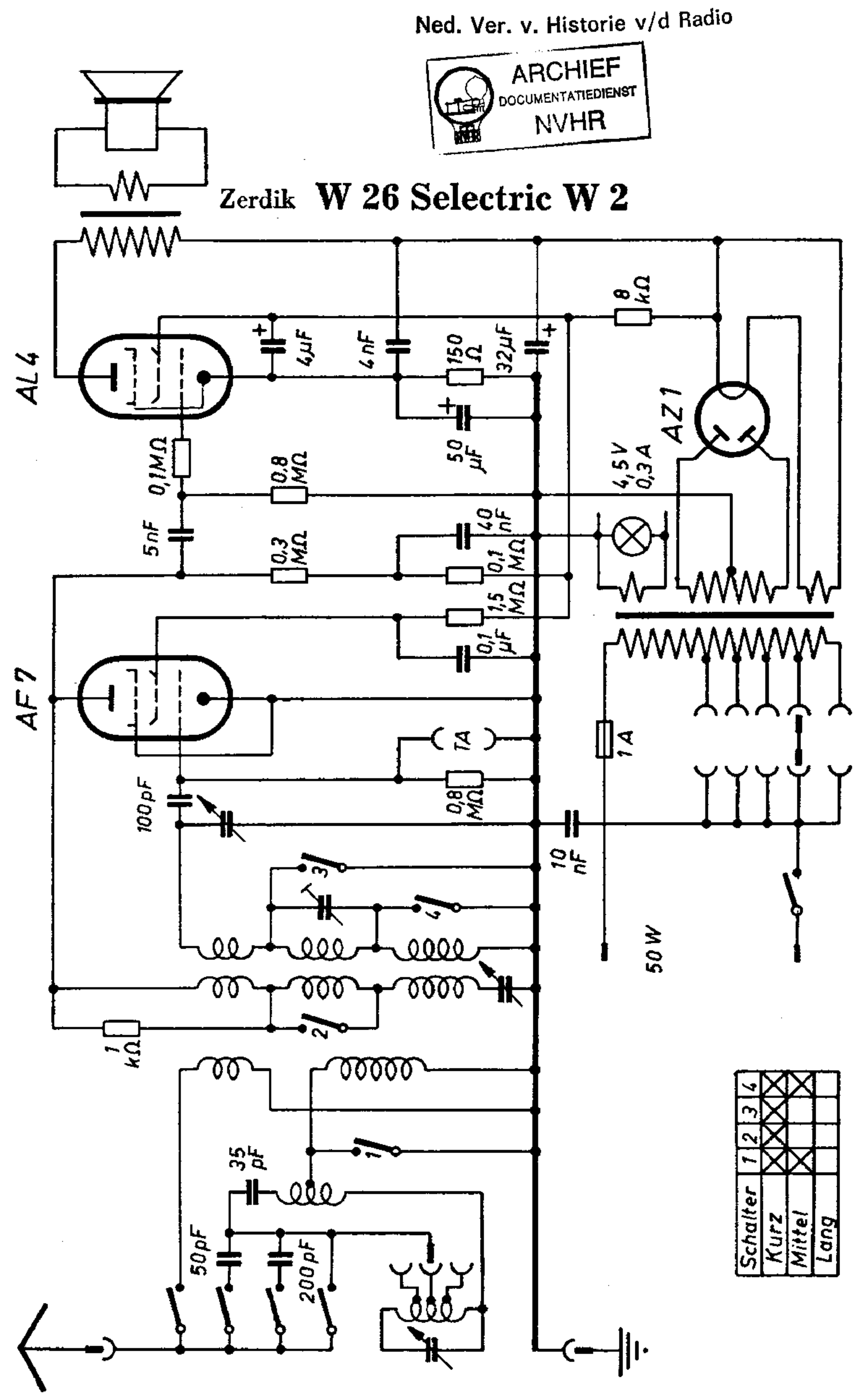
Zerdik W 26 Selectric W 2