Ned. Ver. v. Historie
ARCHIEF
DOCUMENTATIEDIENS
NVHR
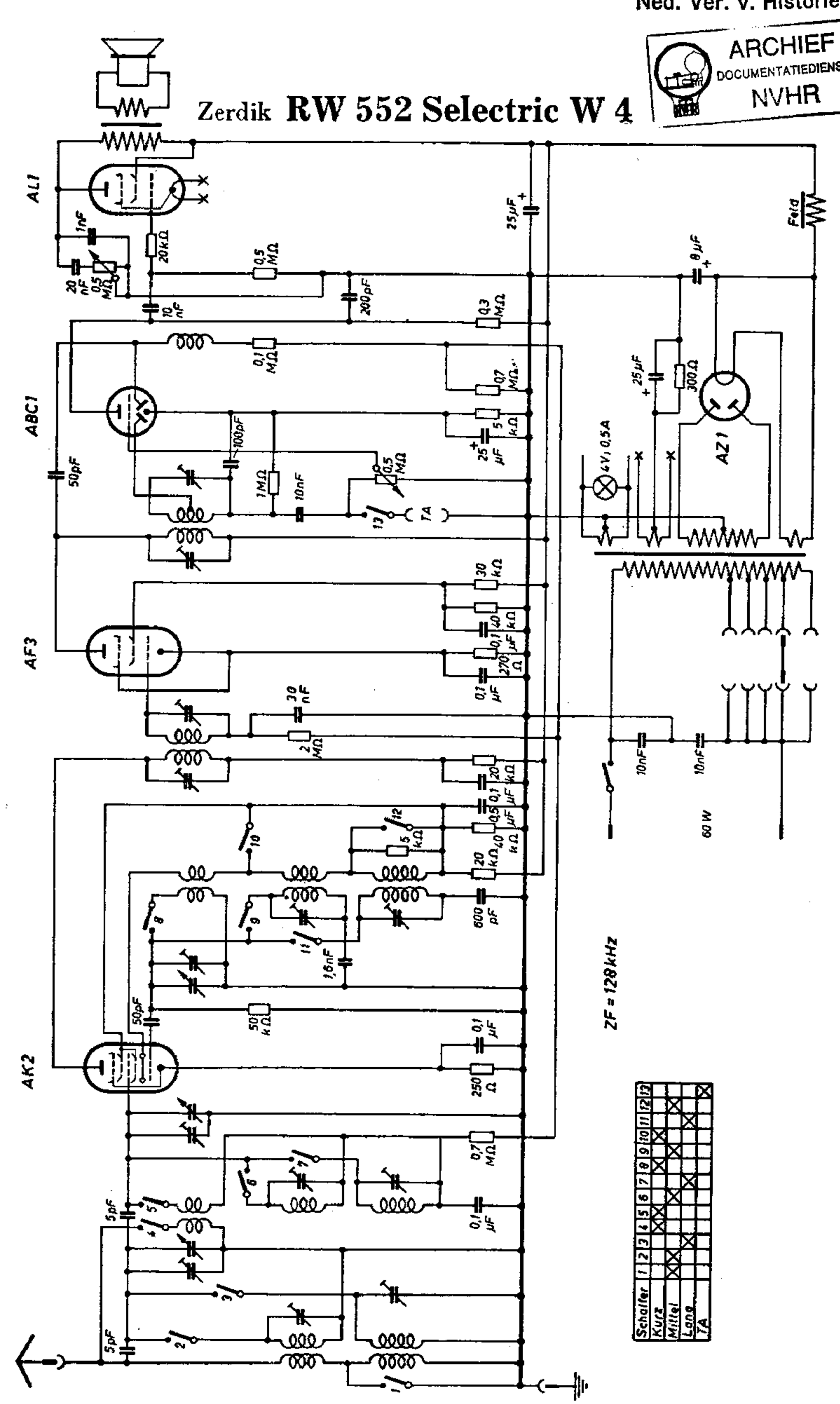
Zerdik RW 552 Selectric W 4