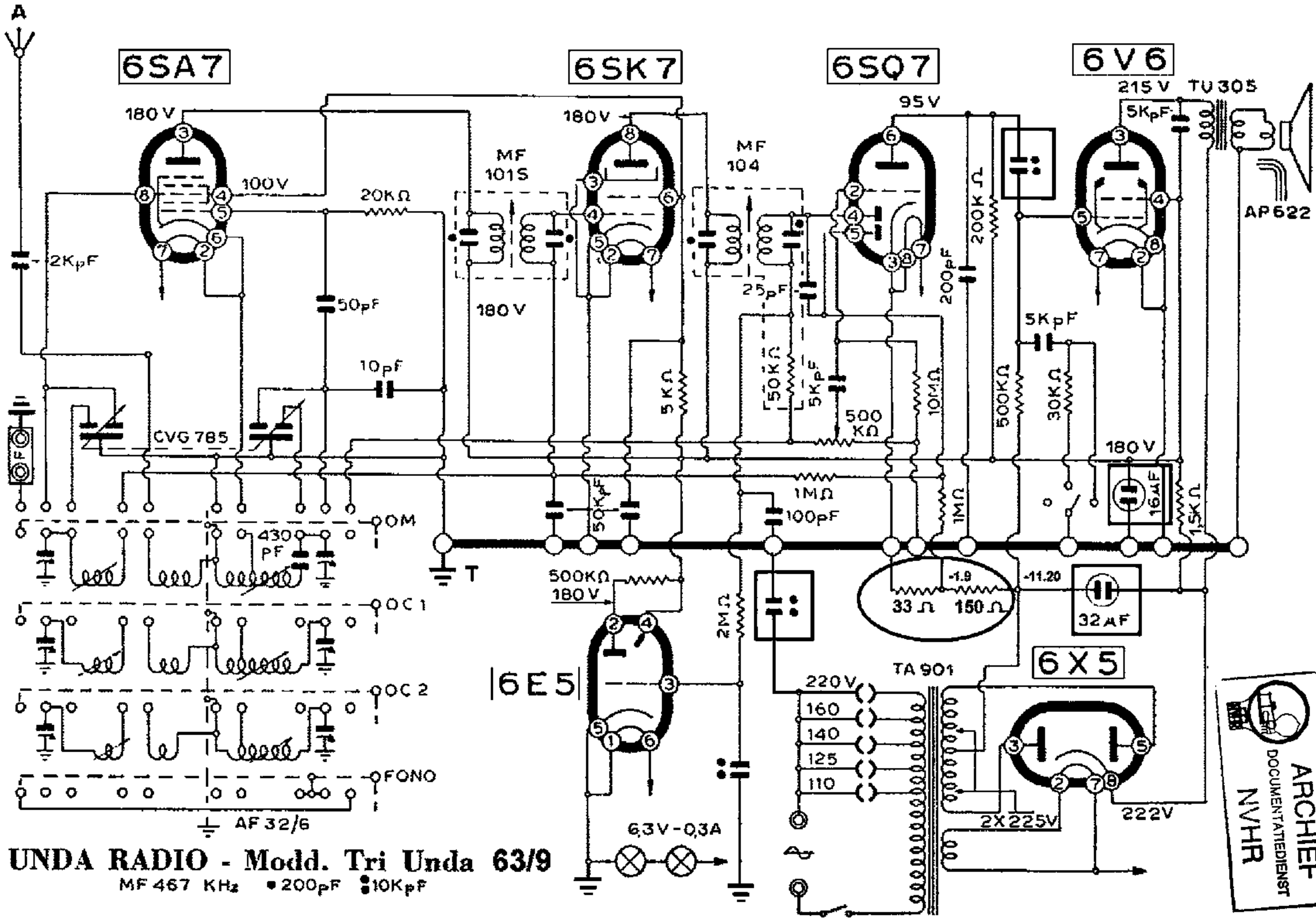

UNDA RADIO - Modd. Tri Unda 63/9

MF 467 KHz • 200pF ⁝ 10KpF