Ned. Ver. v. Historie v/d Radio

Compliments Eckhard Kull
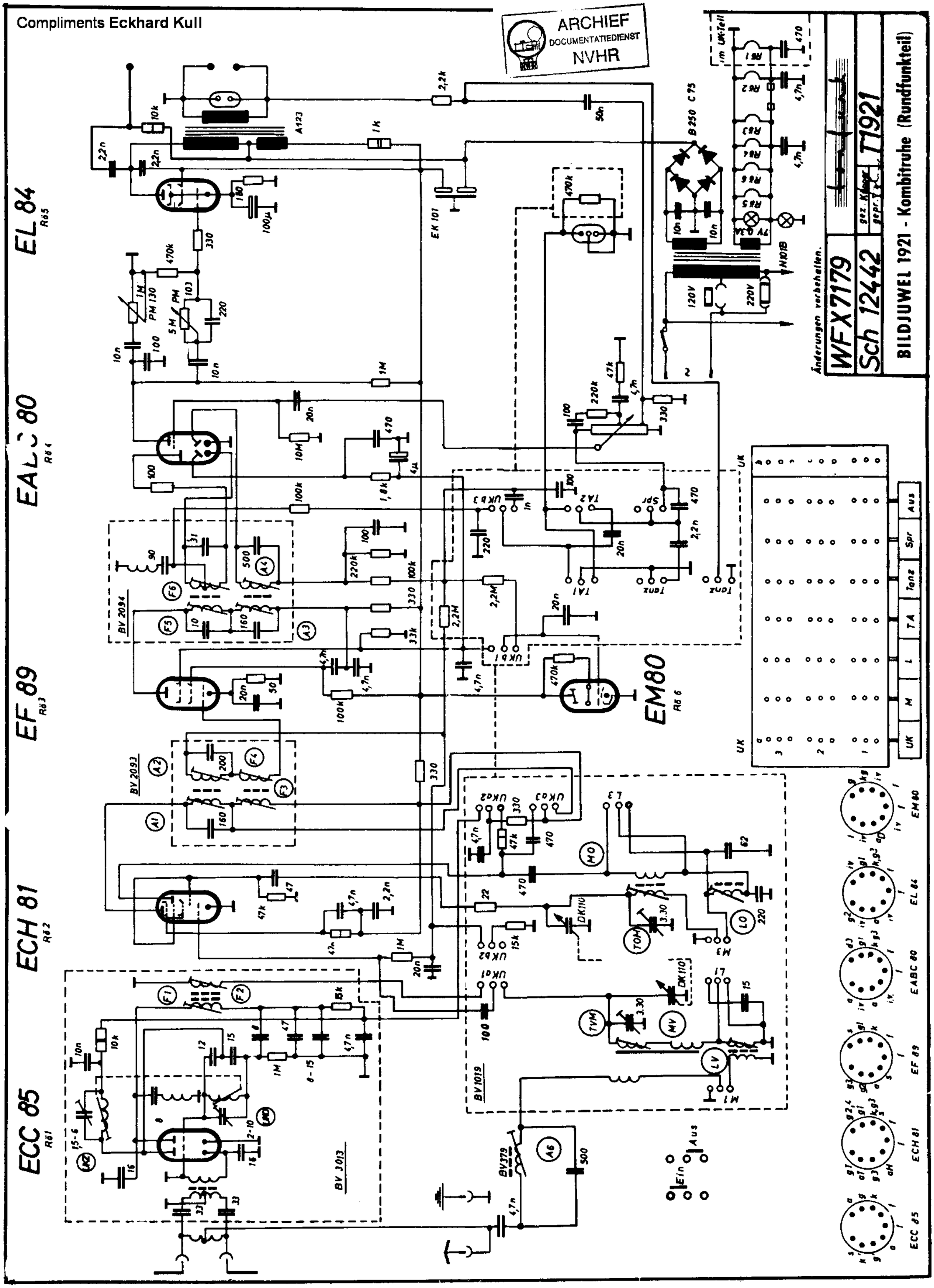
ARCHIEF
DOCUMENTATIEDIENST
NVHR