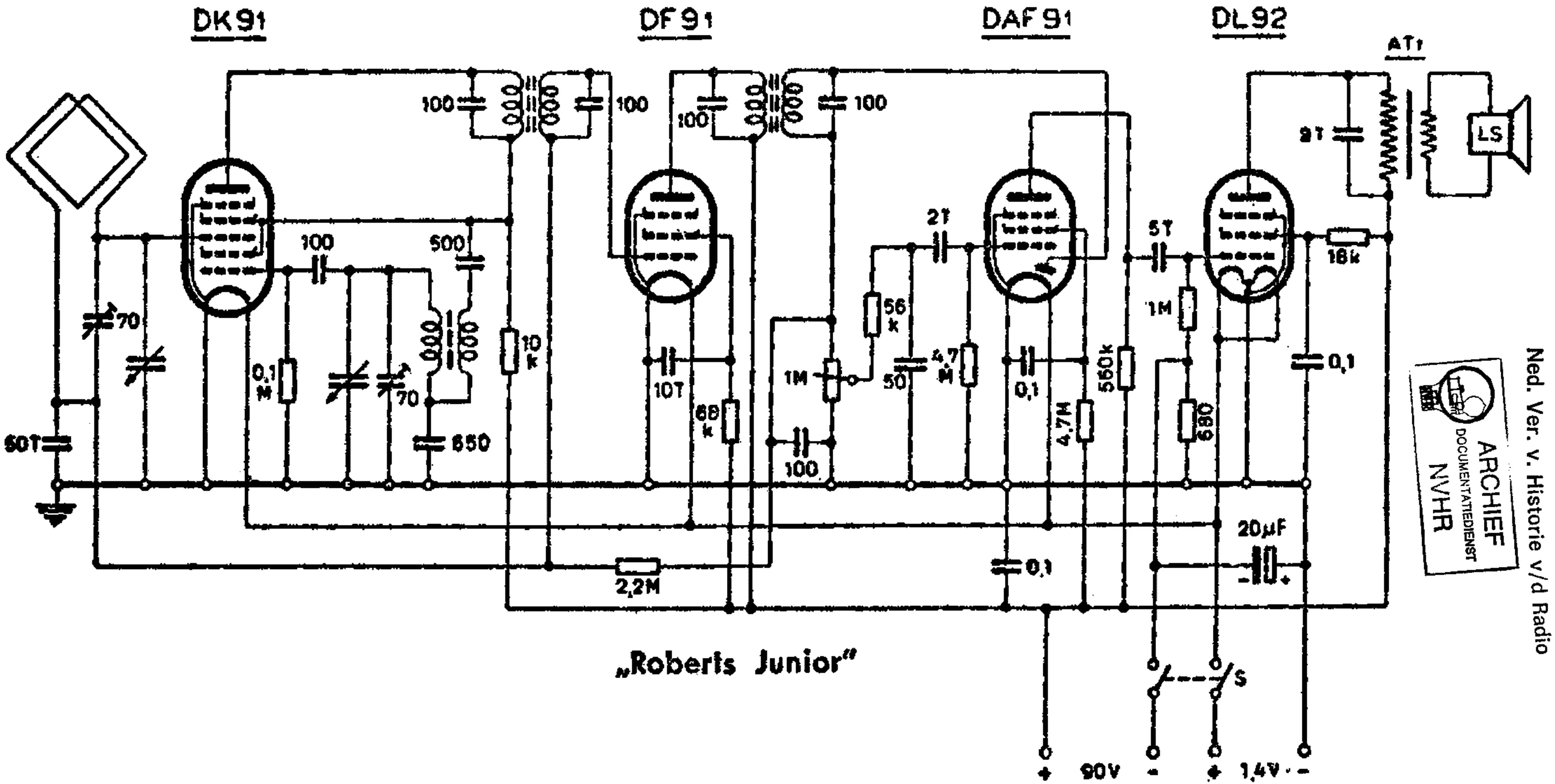

„Roberts Junior"

ARCHIEF DOCUMENTATIEDIENST NVHR
Ned. Ver. v. Historie v/d Radio