Ned. Ver. v. Historie v/d Radio

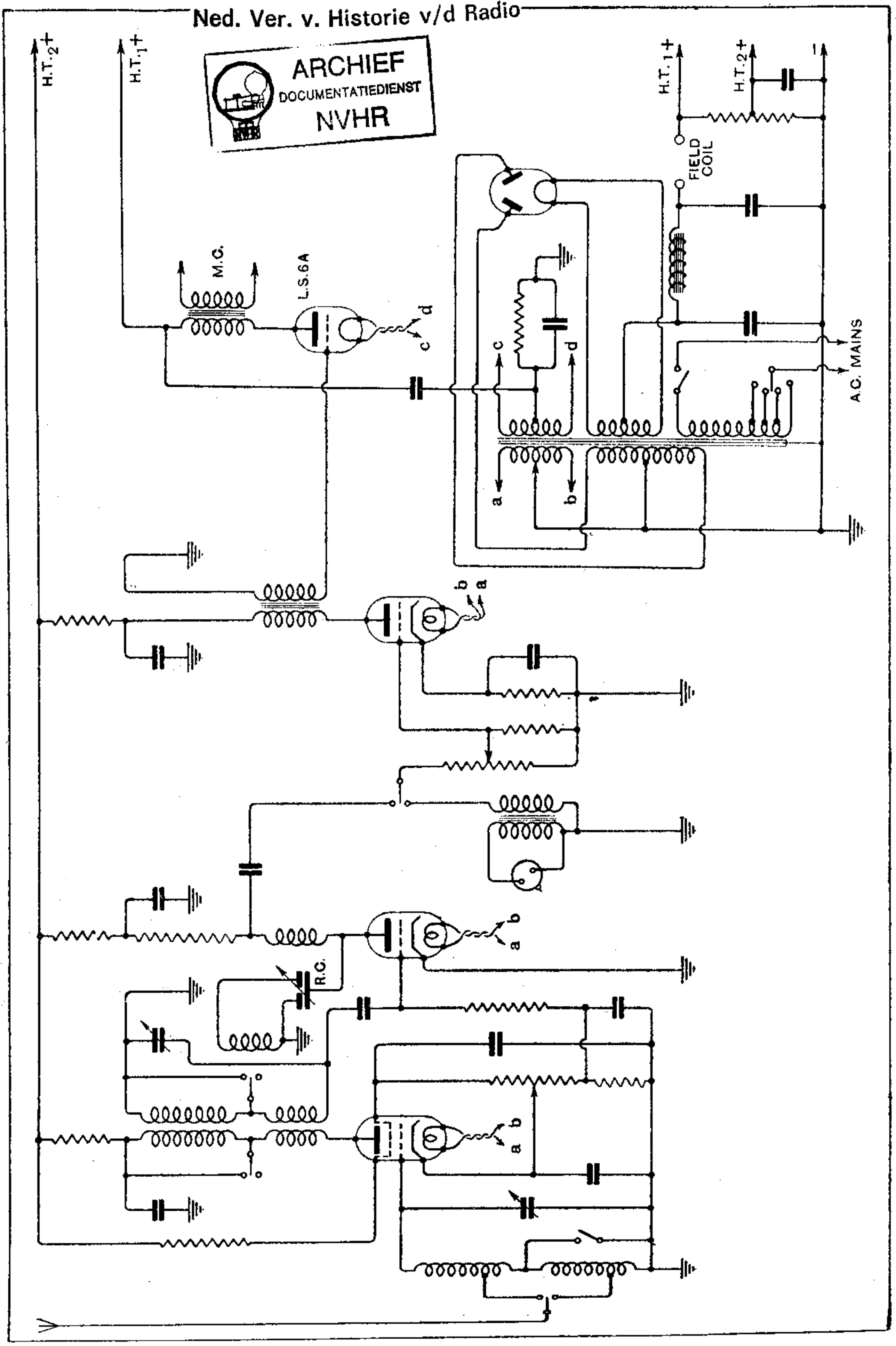

ARCHIEF
DOCUMENTATIEDIENST
NVHR