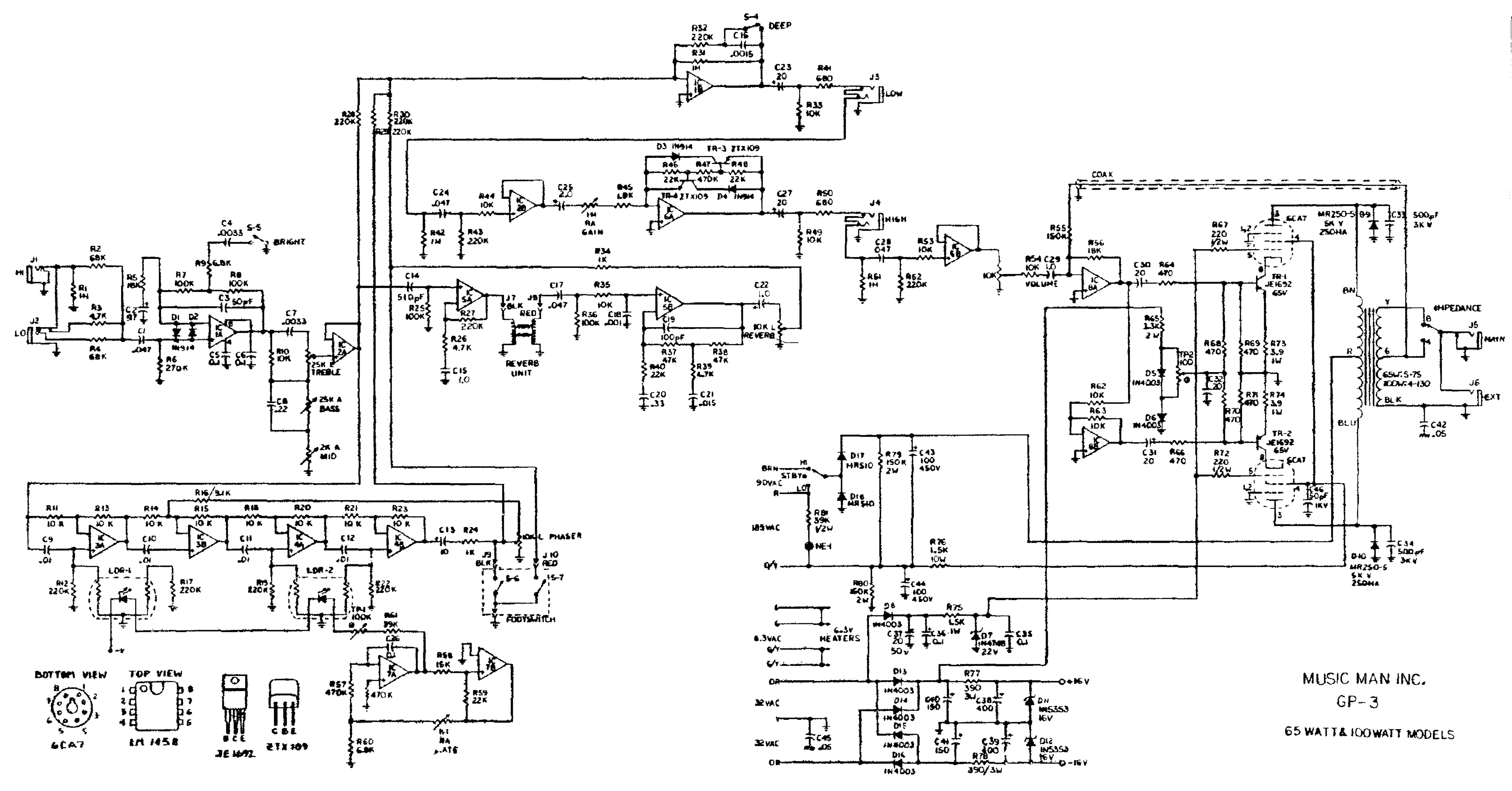

MUSIC MAN INC.

GP-3

65 WATT & 100 WATT MODELS