# Schaltbild – Circuit Diagram

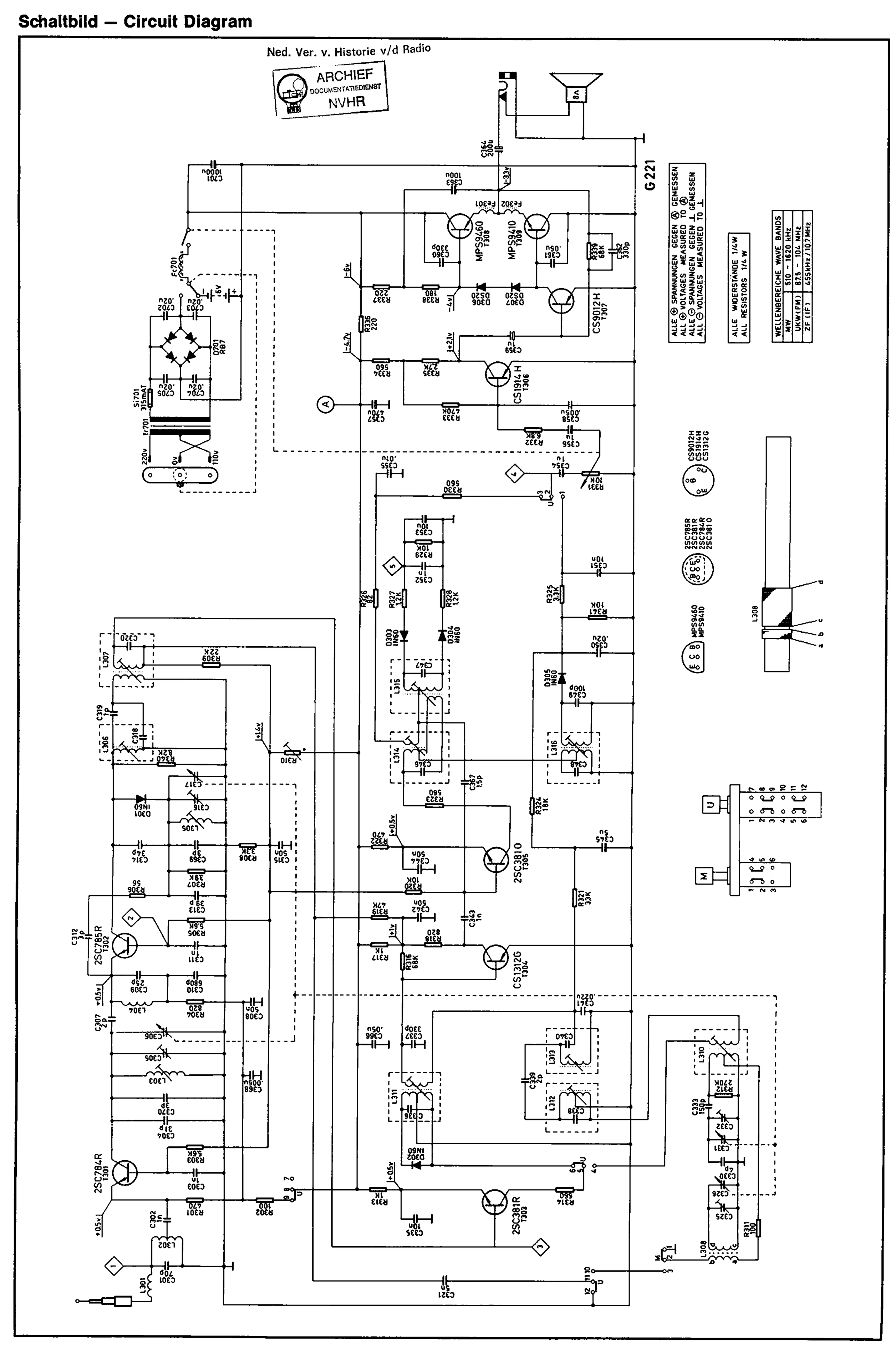
Ned. Ver. v. Historie v/d Radio
ARCHIEF
DOCUMENTATIEDIENST
NVHR
G 221
ALLE ⊕ SPANNUNGEN GEGEN Ⓐ GEMESSEN
ALL ⊕ VOLTAGES MEASURED TO Ⓐ
ALLE ⊖ SPANNUNGEN GEGEN ⊥ GEMESSEN
ALL ⊖ VOLTAGES MEASURED TO ⊥
ALLE WIDERSTÄNDE 1/4W
ALL RESISTORS 1/4 W
WELLENBEREICHE WAVE BANDS
MW 510 - 1620 kHz
UKW(FM) 87,5 - 104 MHz
ZF (IF) 455kHz/10,7MHz
CS9012H
CS1914H
CS1312G
2SC785R
2SC381R
2SC784R
2SC3810
MPS9460
MPS9410
L308
2SC785R T302
2SC784R T301
2SC3810 T305
CS1312G T304
2SC381R T303
CS1914H T306
CS9012H T307
MPS9460 T308
MPS9410 T309
Si701 315mA T
Tr701
220v
0v
110v
D701 RB7
Fc701
L301
L302
L303
L304
L305
L306
L307
L308
L310
L311
L312
L313
L314
L315
L316
D301 IN60
D302 IN60
D303 IN60
D304 IN60
D305 IN60
D306 D520
D307 D520
Fe301
Fe302
R311 100
R312 270K
R313 1K
R314 560
R316 68K
R317 1K
R318 820
R319 47K
R320 10K
R321 33K
R322 470
R323 560
R324 18K
R325 3,3K
R326 82
R327 1,2K
R328 1,2K
R329 10K
R330 560
R331 10K
R332 6,8K
R333 470K
R334 560
R335 2,7K
R336 220
R337 220
R338 180
R339 68K
R340 82K
R301 470
R302 100
R303 5,6K
R304 820
R305 5,6K
R306 56
R307 39K
R308 3,3K
R309 22K
R310
C301 10000u
C302 ,02u
C303 ,02u
C304 ,02u
C305 ,02u
C307 2p
C308 50n
C309 25p
C310 680p
C311 1n
C312 3p
C313 39p
C314 34p
C315 50n
C316
C317
C318
C319 1p
C320
C321 5n
C322 ,022u
C323 330p
C324 ,05u
C325
C326
C329 100p
C330 6p
C331 ,05u
C332
C333 150p
C334 50n
C335 10n
C336
C337 330p
C338
C339 2p
C340
C341 ,022u
C342 50n
C343 1n
C344 50n
C345 5n
C346
C347
C348
C349 100p
C350 ,02u
C351 10n
C352 5p
C353 10u
C354 1u
C355 ,01u
C356 1u
C357 470u
C358 ,005u
C359 1u
C360 330p
C361 ,05u
C362 330p
C363 100u
C364 200u
C366 ,05u
C367 1,5p
C368 ,005u
C369 3p
C370 3p
C371 ,022u
C372 ,022u
C373 ,02u
C374 ,02u
C375 ,02u
C376 ,02u
C377 ,02u
C378 ,02u
C379 ,02u
C380 ,02u
C381 ,02u
C382 ,02u
C383 ,02u
C384 ,02u
C385 ,02u
C386 ,02u
C387 ,02u
C388 ,02u
C389 ,02u
C390 ,02u
C391 ,02u
C392 ,02u

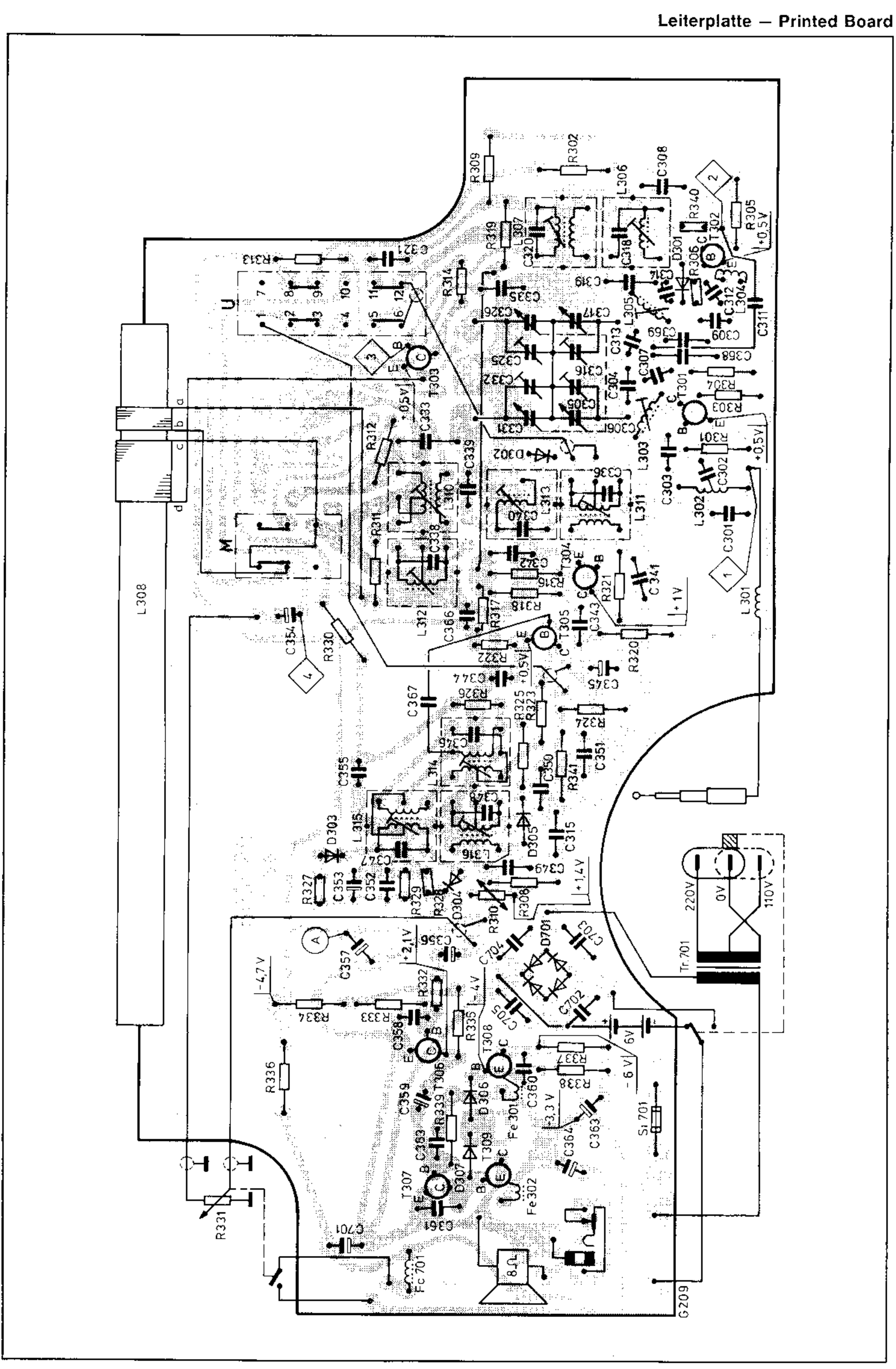
L308
R309
R302
L306
C308
R340
R305
+0,5V
R319
L307
C320
C318
D301
R306
T302
R313
C321
R314
C319
C335
C326
C317
L305
C312
L304
C311
C309
C368
C313
C307
C325
C316
C304
T301
R304
R303
T303
C332
C305
C331
C306
R301
C333
R312
C339
D302
L303
C303
C302
L302
C301
L301
L310
L313
L311
R311
C338
C336
C342
T304
R321
C341
+1V
L312
C366
R317
R316
R318
C343
T305
R320
C354
R330
R322
C344
C345
C367
R326
R325
R323
R324
C351
C355
L314
C350
R341
L315
D305
C315
D303
C347
C349
R327
C353
C352
R329
R328
D304
R310
R308
+1,4V
220V
0V
110V
Tr.701
C357
+2,1V
C356
C704
D701
C703
-4,7V
R332
-4V
C702
C705
R334
R333
C358
R335
T308
6V
R337
R338
-6V
R336
C359
T306
D306
C360
+3,3V
C364
C363
Si 701
R339
C362
T309
Fe 301
T307
D307
Fe 302
R331
C361
C701
Fc 701
8Ω
G209