Ned. Ver. v. Historie v/d Radio

Grundig Drucktastenboy 52
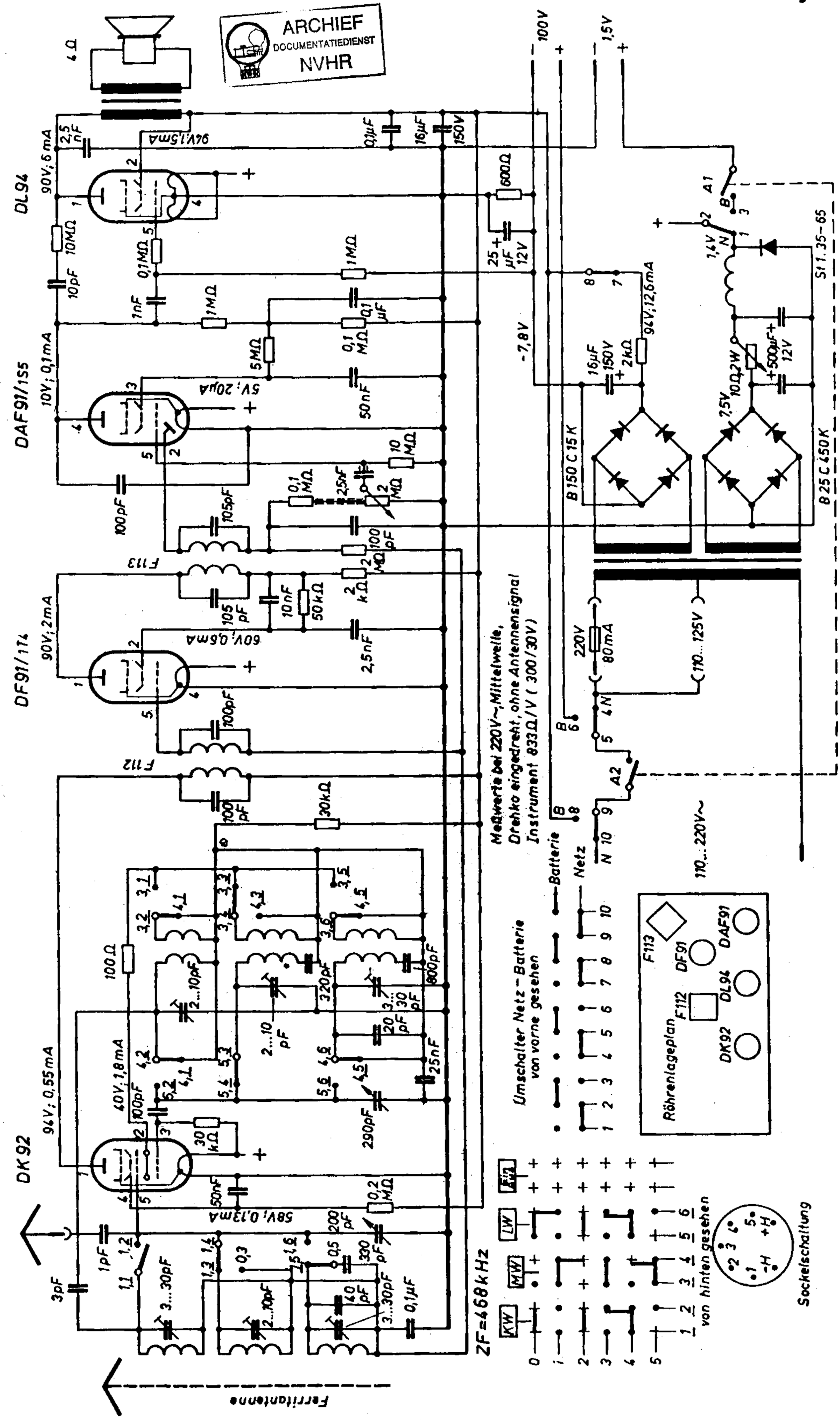
ARCHIEF
DOCUMENTATIEDIENST
NVHR