Model 41,42,44,46,47 (KA)

VOLTAGE READINGS ON 60-CYCLE KA RECEIVER

The following voltage readings are to be taken at points beneath the chassis. Be sure that the overall condenser and tube shield housing cover is fastened in place or else oscillation will occur which will affect voltage readings. The speaker field coil must remain connected in the circuit and all tubes must be in their correct sockets, otherwise extensive damage will be done.

1. General Information
   Volume Control set at any position but no signal
   Voltage regulator tap in high position.

Line Volts	Line Watts	Filament Volts Rect.	Filament Volts Pwr.	Filament Volts Amp.	Plate-Cathode Volts Pwr.	Plate-Cathode Volts RF	Plate-Cathode Volts Detector Det.Amp.	Screen Volts RF
100	78	4.2	2.1	2.1				
110	96	4.8	2.35	2.35				
115	100	5.0	2.5	2.5	233	152	**	85
120	114	5.15	2.6	2.6				
130	132	5.5	2.8	2.8				

** A voltage reading cannot be obtained at the plate prong of the two (2) element detector. The plate voltage reading on the detector amplifier should also be ignored, because to take such a reading, it becomes necessary to shunt the voltmeter across several of the resistances in the circuit and the result is a reading of about 20 volts which will vary in accordance with the intensity of the signal received.

Voltages Across Condenser Block Sections (Line Voltage 115)

1st	2nd	3rd	4th
390	352	280	152

Bleeder Circuit Voltages (Line Voltage 115)

Volts Across 100 ohms	-	2.5
Volts Across 300 ohms	-	10
Volts Across 800 ohms	-	47.5
Volts Across 5,000 ohms	-	118
Volts Across 6,700 ohms	-	53
Volts Across 13,000 ohms	-	89
Volts Across Speaker Field	-	72
Volts Across 400 ohm choke	-	38

NOTE:-
Use a high resistance voltmeter (1000 ohms per volt). Readings may vary slightly due to commercial tolerance allowable in the manufacture of electrical equipment and tubes.

tesy Nostalgia Air

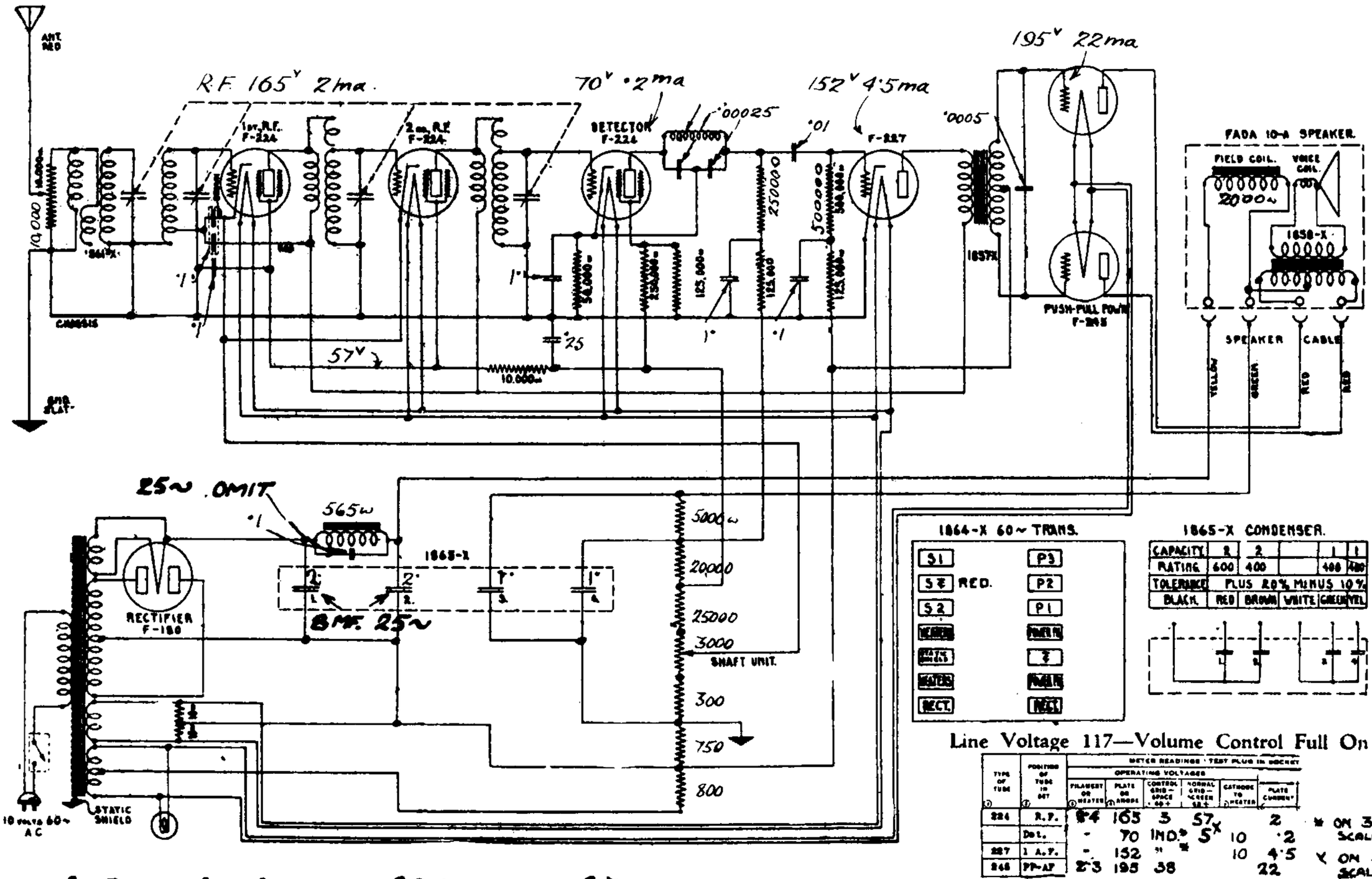

Line Voltage 117—Volume Control Full On

Type of Tube	Position of Tube in Set	Meter Readings · Test Plug in Socket · Operating Voltages						Plate Current
		Filament or Heater	Plate or Anode	Control Grid — Space + 90 +	Normal Grid — Screen 45 +	Cathode to Heater		
224	R.F.	2·4	165	3	57			2
	Det.	-	70	IND.*	5*	10		·2
227	1 A.F.	-	152	"		10		4·5
245	PP-AF	2·3	195	38				22

* ON 300V SCALE
X ON 30V SCALE

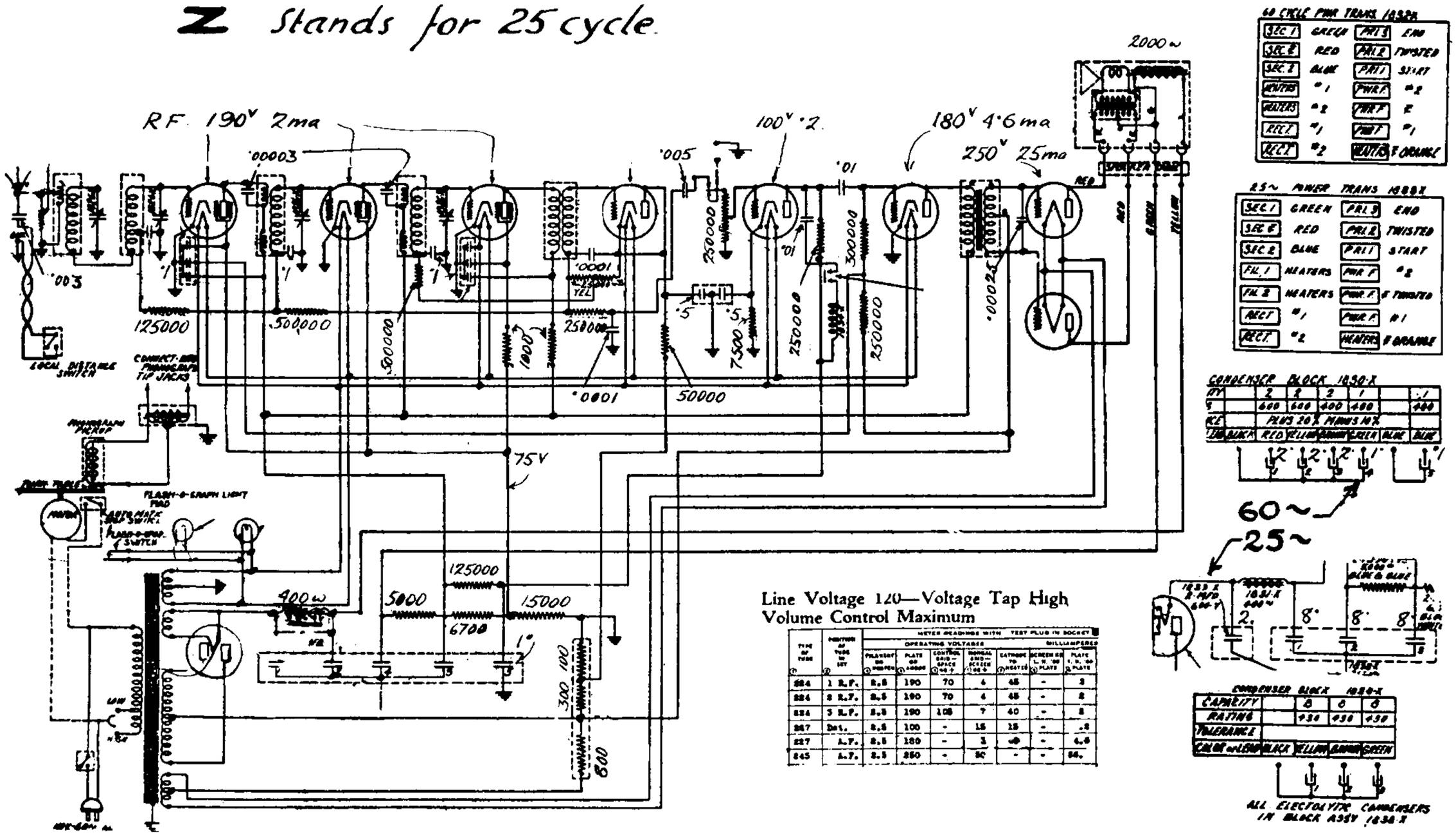

Line Voltage 120—Voltage Tap High
Volume Control Maximum

Type of Tube	Position of Tube in Set	Meter Readings with Test Plug in Socket · Operating Voltages · Milliamperes						
		Filament or Heater	Plate or Anode	Control Grid — Space	Normal Grid — Screen	Cathode to Heater	Screen or L.S. or Plate	Plate L.S. or Plate
224	1 R.F.	2.5	190	70	4	45	-	3
224	2 R.F.	2.5	190	70	4	45	-	2
224	3 R.F.	2.5	190	108	7	40	-	2
227	Det.	2.5	100	-	15	15	-	.5
227	A.F.	2.5	180	-	3	40	-	4.5
245	A.F.	2.5	250	-	50	-	-	36.

Models 43 - 43z. 1931

Z Stands for 25 cycle.

Models. 40c. 42. 44. 46. 47. 1930-31.

DATA SHEET FADA-10

Data Sheet 11 now omitted.

MODEL 42,44,46,41,47
Schematic
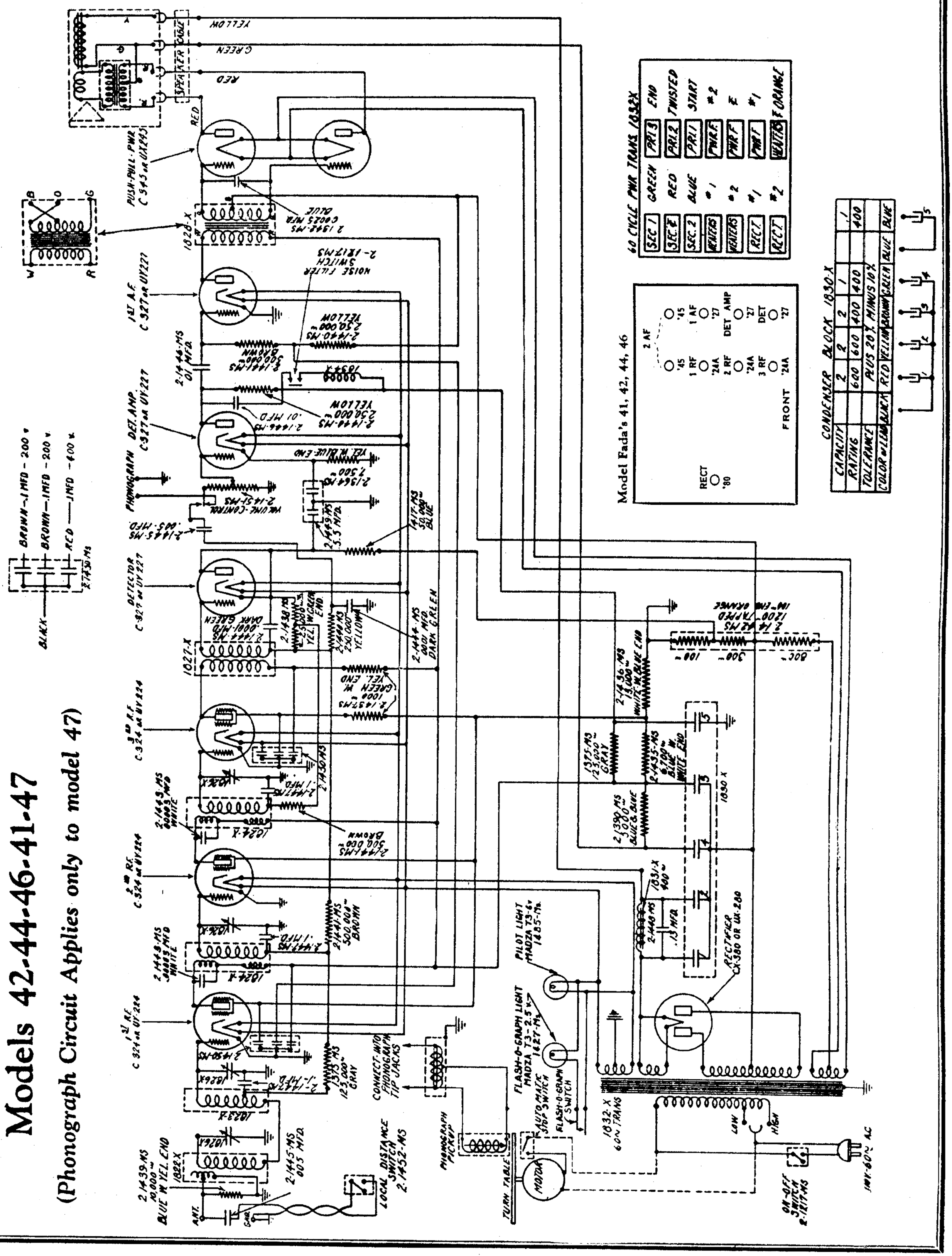
FADA RADIO & ELECTRIC CORP.