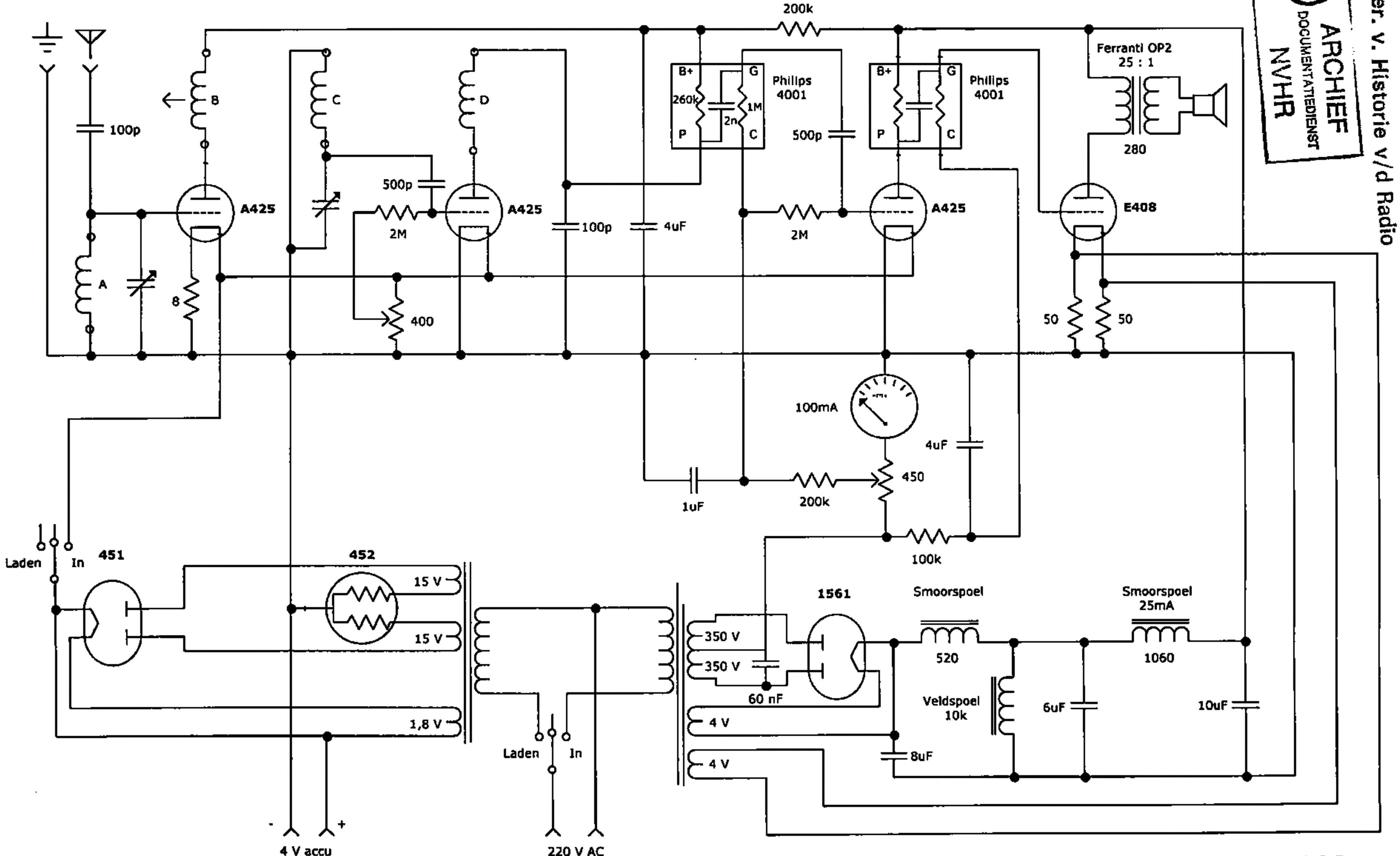

Dordtsche Radio-Industrie - Dynaco A 1928

ARCHIEF DOCUMENTATIEDIENST NVHR
Ver. v. Historie v/d Radio