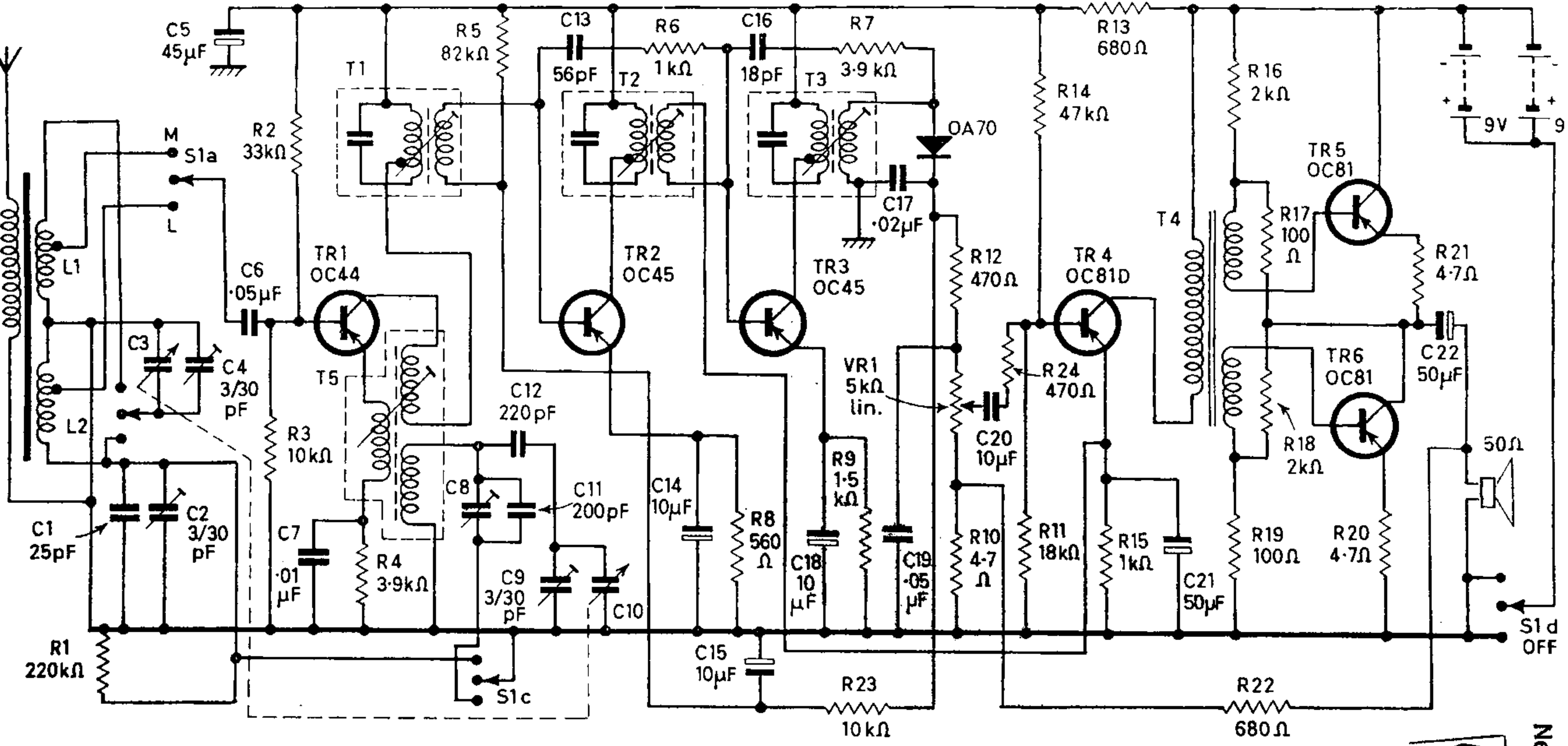

CIRCUIT DIAGRAM—DECCA MODEL TP75

Notes: C1, C11, C13 and C16 are 2½ per cent. C5 10 v.; C14, C15, C18, C20, C21, C22 are 6 v. R10, R16, R17, R18, R19, R20, R21 are 5 per cent.

Ned. Ver. v. His
ARCH
DOCUMENTA
NVI