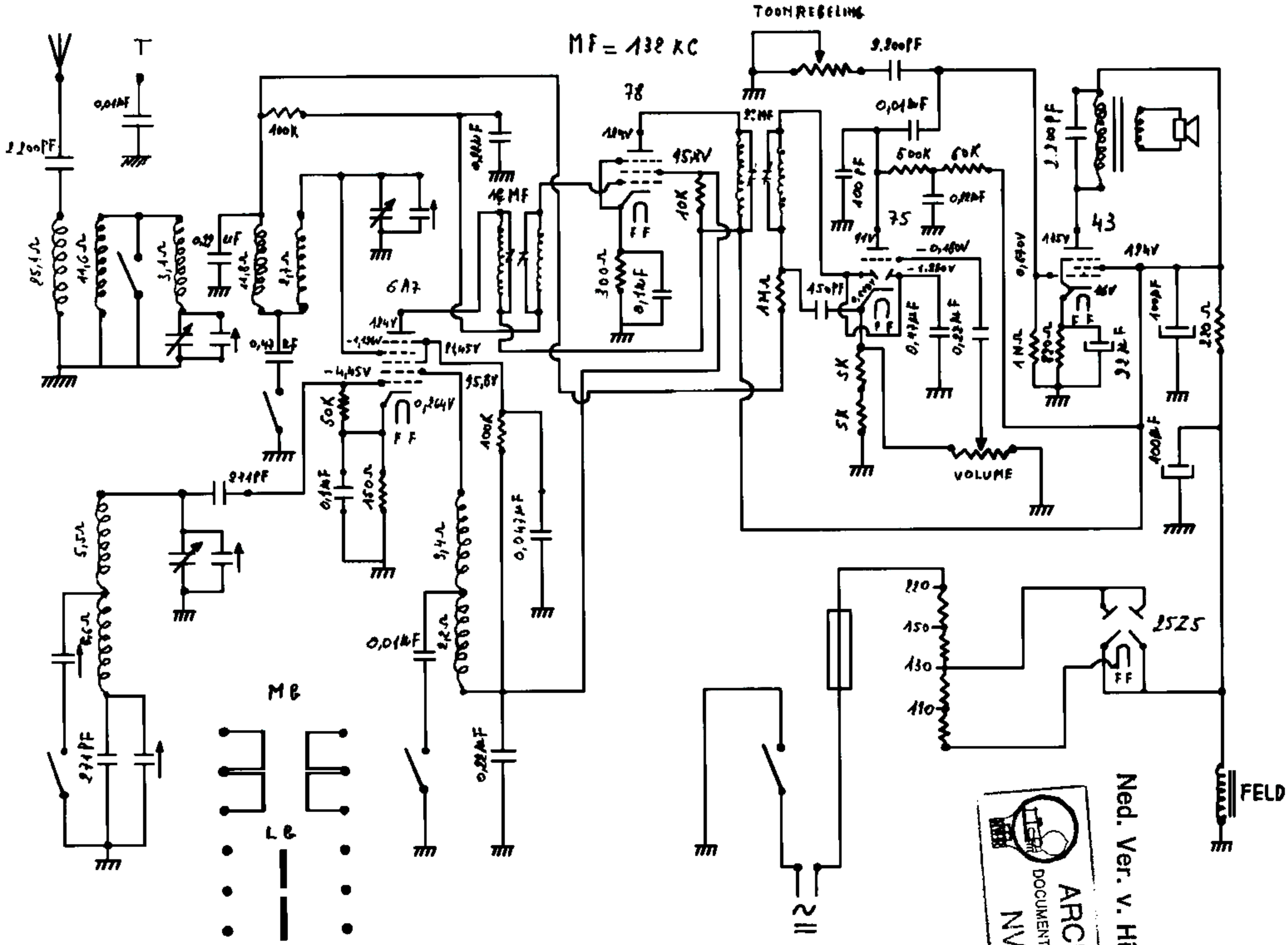

Ned. Ver. v. Histo
ARCHIEF
DOCUMENTATIE
NVHI