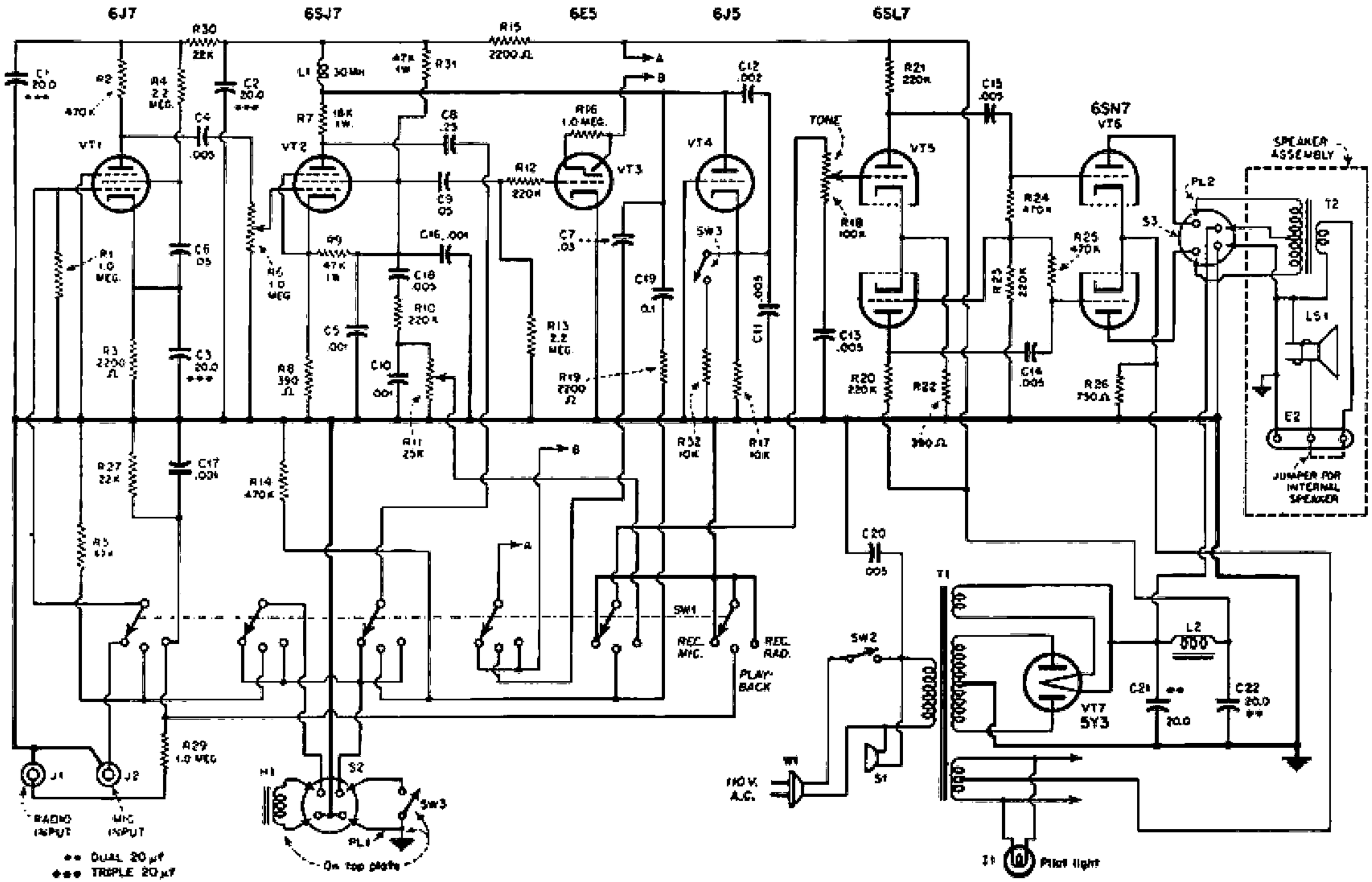
6J7
6SJ7
6E5
6J5
6SL7
6SN7
VT1
VT2
VT3
VT4
VT5
VT6
VT7
5Y3
R30
22K
R15
2200 Ω
R31
47K
1W
L1
30 MH
R7
18K
1W.
R16
1.0 MEG.
R12
220K
R21
220K
C15
.005
TONE
R18
100K
R24
470K
R25
470K
R23
220K
C14
.005
R26
750 Ω
R20
220K
R22
390 Ω
R13
2.2
MEG.
R19
2200
Ω
R32
10K
R17
10K
R11
25K
R14
470K
R27
22K
C17
.001
R29
1.0 MEG
R8
390
Ω
R9
47K
1W
C16 .001
C18
.005
R10
220K
C10
.001
C5
.001
C6
.05
C4
.005
C2
20.0
C1
20.0
C3
20.0
R1
1.0
MEG.
R2
470K
R3
2200
Ω
R4
2.2
MEG.
R6
1.0
MEG
C8
.25
C9
.05
C7
.03
C12
.002
C19
0.1
C11
.005
C13
.005
C20
.005
C21
20.0
C22
20.0
L2
SW1
SW2
SW3
S1
S2
S3
PL1
PL2
T1
T2
LS1
E2
J1
J2
H1
I1
SPEAKER ASSEMBLY
JUMPER FOR INTERNAL SPEAKER
REC. MIC.
REC. RAD.
PLAY BACK
110 V. A.C.
RADIO INPUT
MIC INPUT
On top plate
Pilot light
** DUAL 20 μf
*** TRIPLE 20 μf