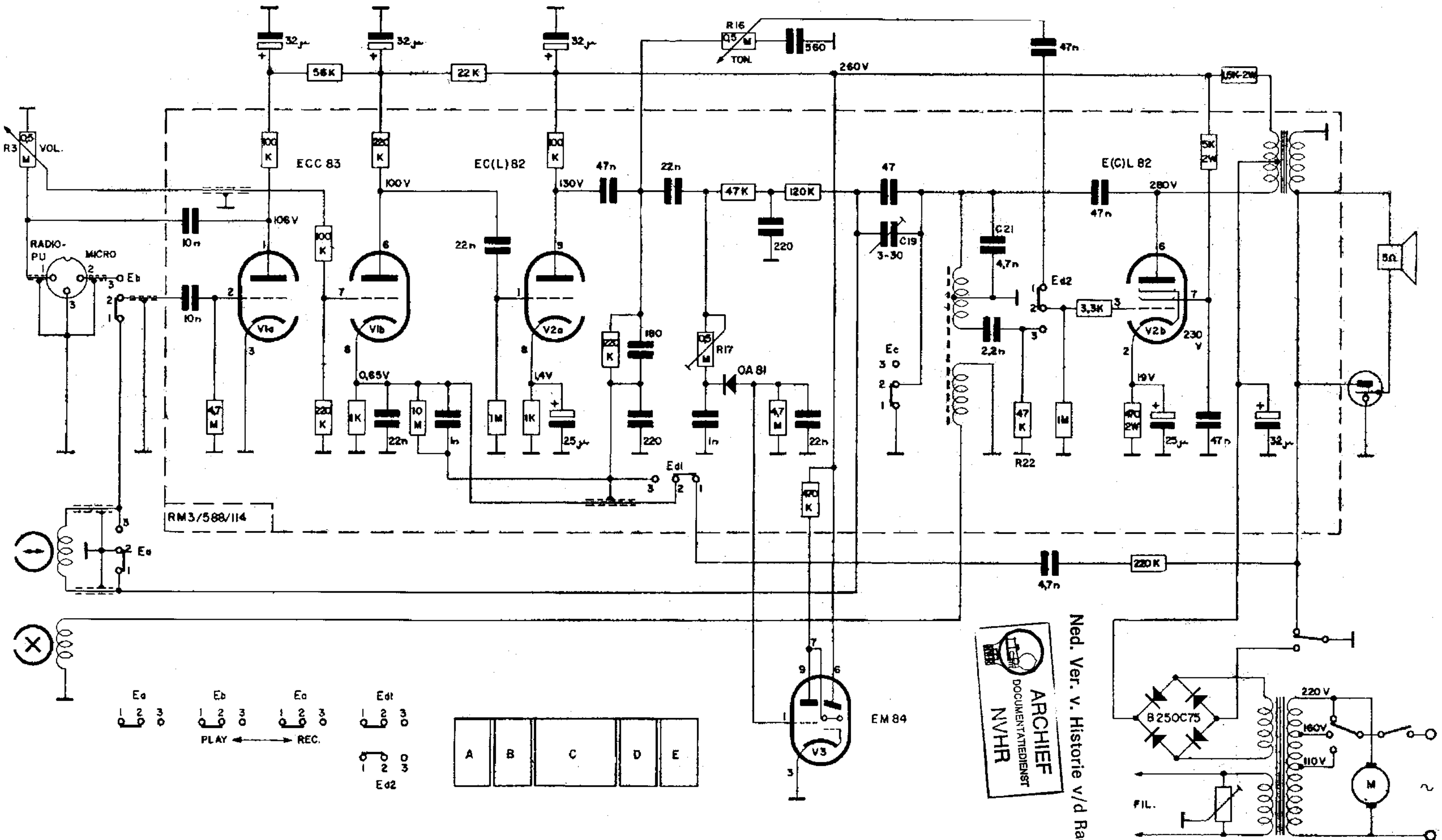

ARCHIEF DOCUMENTATIEDIENST NVHR

Ned. Ver. v. Historie v/d Radio

BARCO R.M.3