Krischker **Boss 4 WL**

Ned. Ver. v. Historie v/d Radio
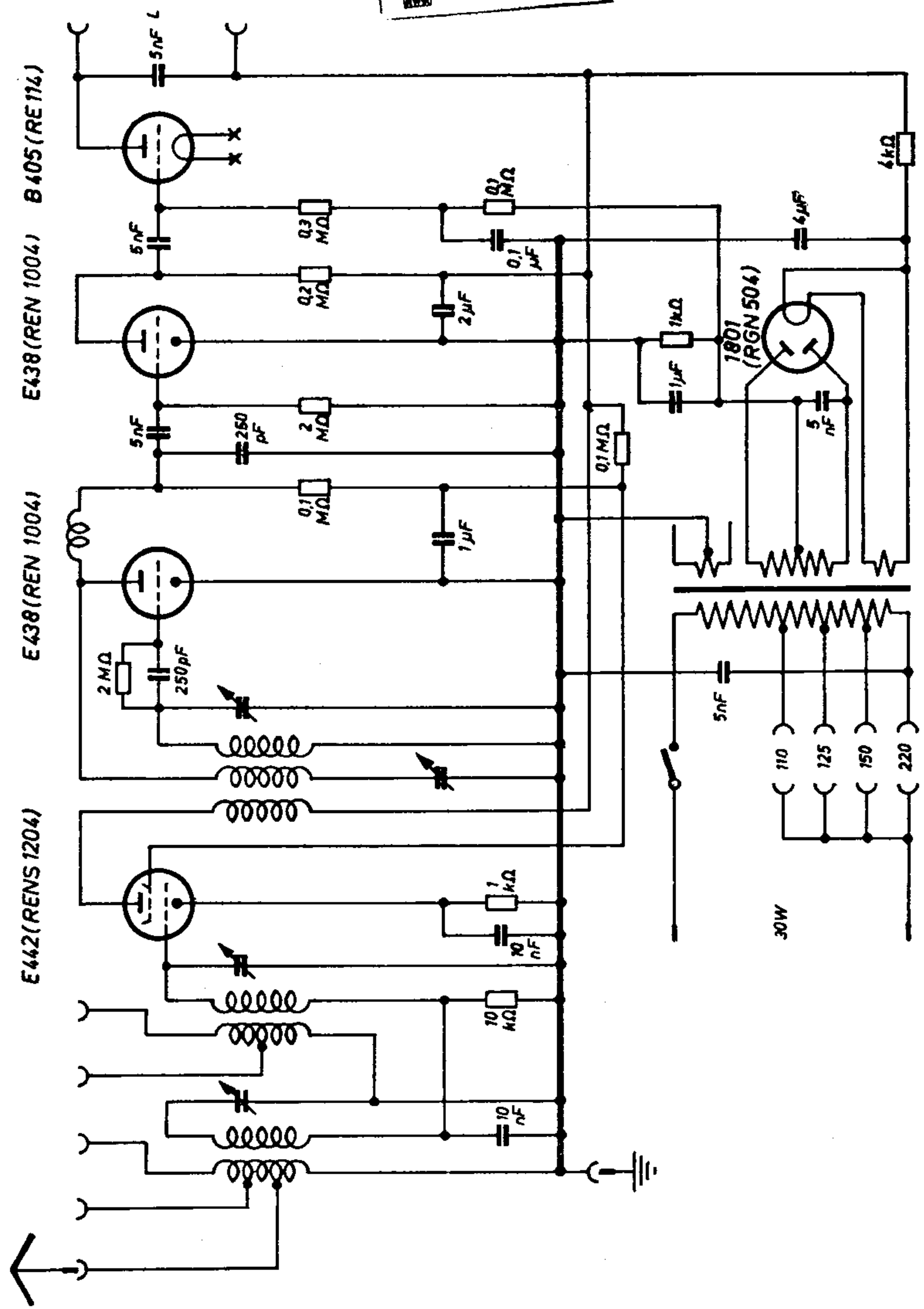
ARCHIEF
DOCUMENTATIEDIENST
NVHR