DECCA Model AMG111

General Description: Two-stage, single-valve (plus metal rectifier), record reproducer with four-speed, B.S.R. Monarch UA14 auto-record change unit and B.S.R. "Ful-fi" cartridge. Stylii type TC8R (red) microgroove; TC8G (green) 78 r.p.m.

Power Supply: A.C. mains, 110 and 200–250 volts, 50 c/s., 50 watts.

Valves: (V1) ECL82. SenTerCell metal rectifier Type TYC2D. Typical voltages shown on circuit diagram with selector plug on 240/250-volt tap.

Pilot Lamp: 6·3 volts, 0·3 amp.

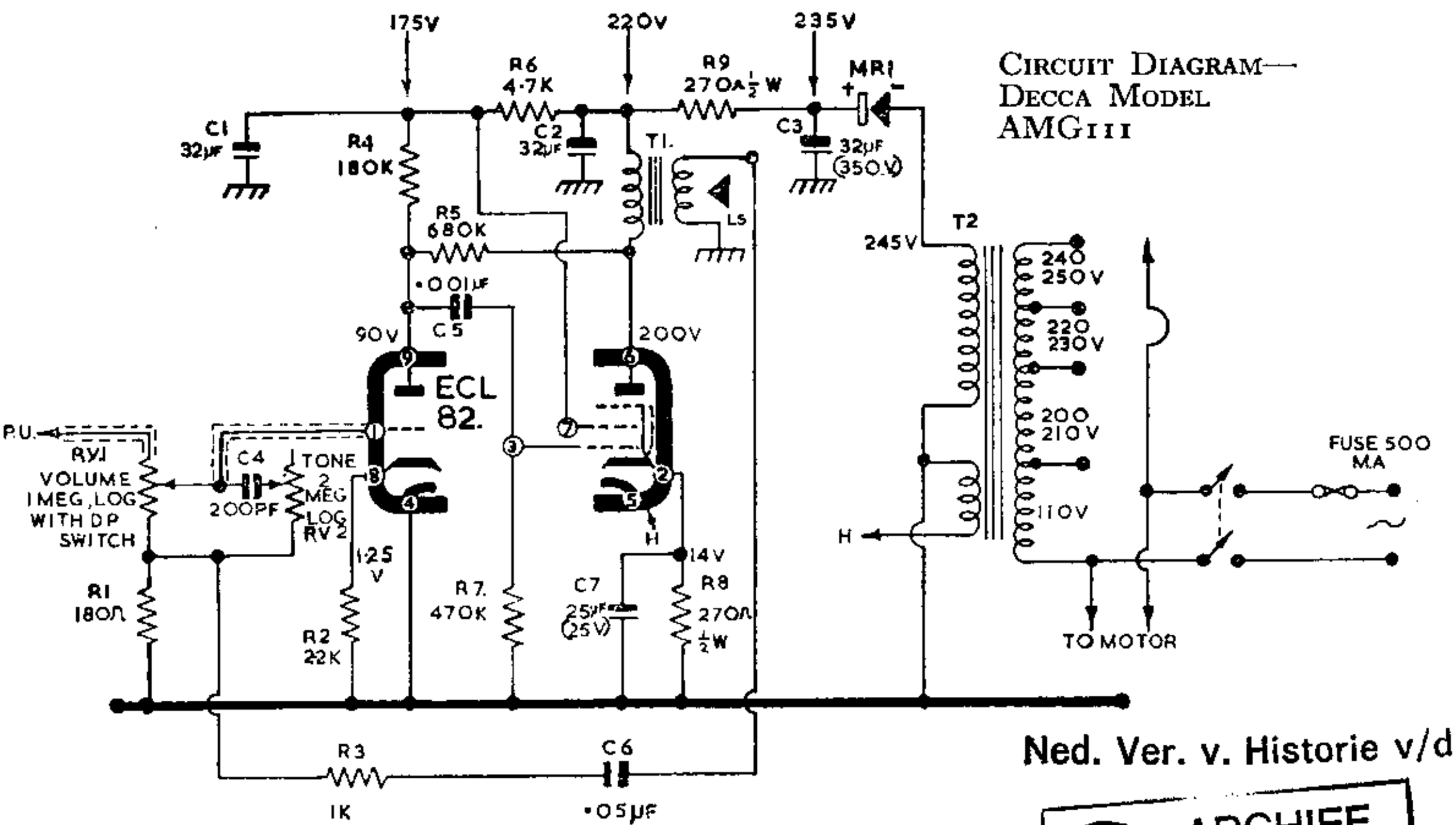

Ned. Ver. v. Historie v/d
ARCHIEF
DOCUMENTATIEDIENST