Ned. Ver. v. Historie v/d Radio
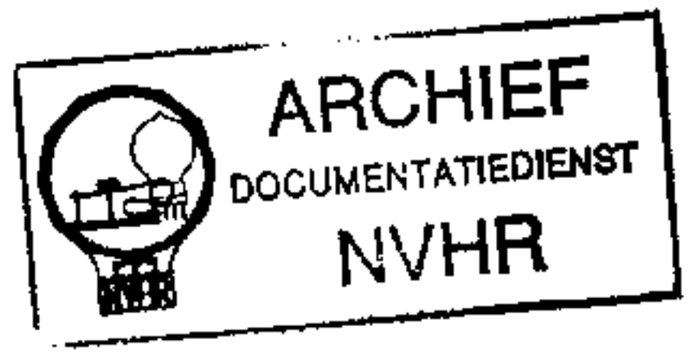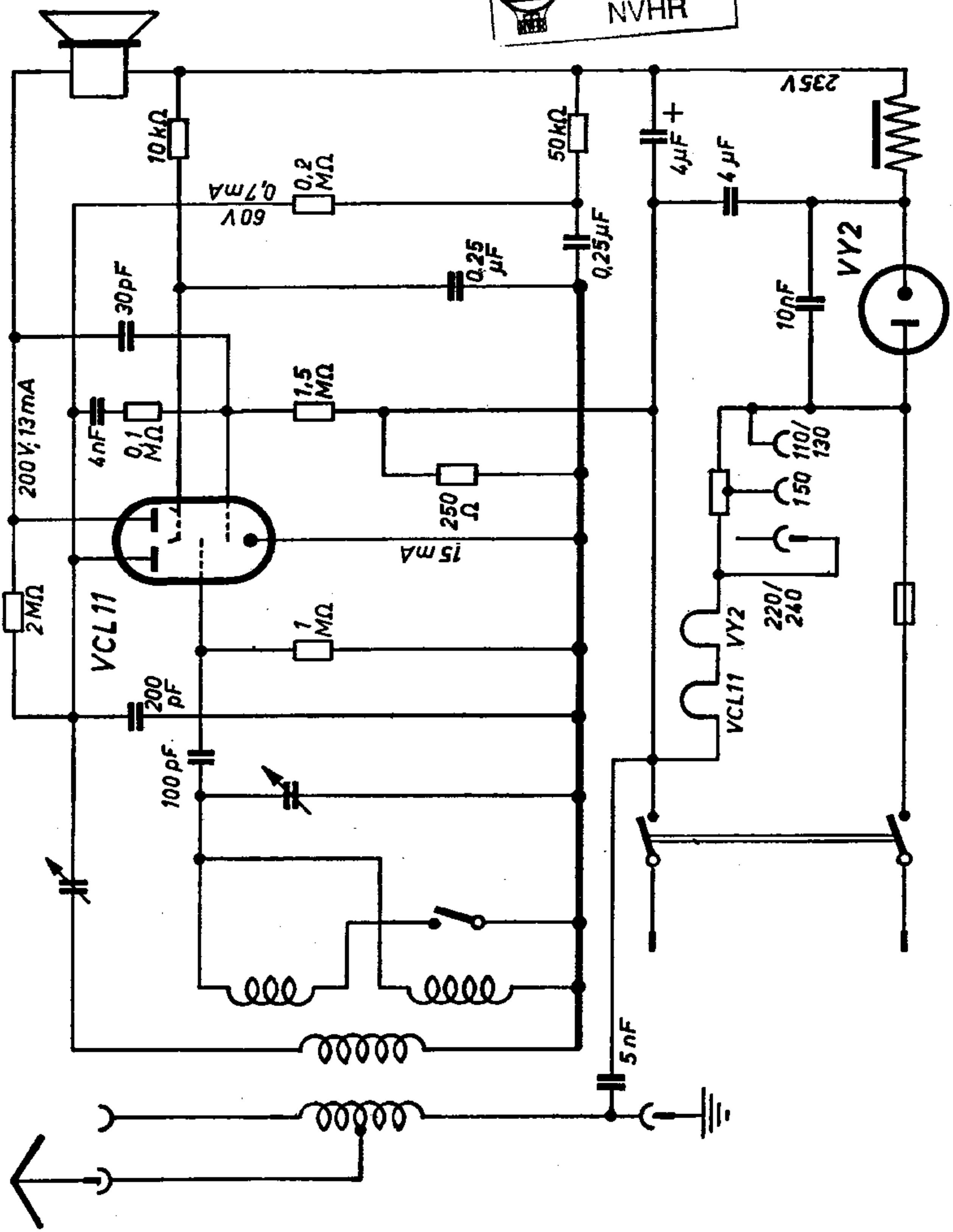
# DTW 462 GW