DTW 235 W u. 236 II W Stolzenfels

Ned. Ver. v. Historie v/d Radio
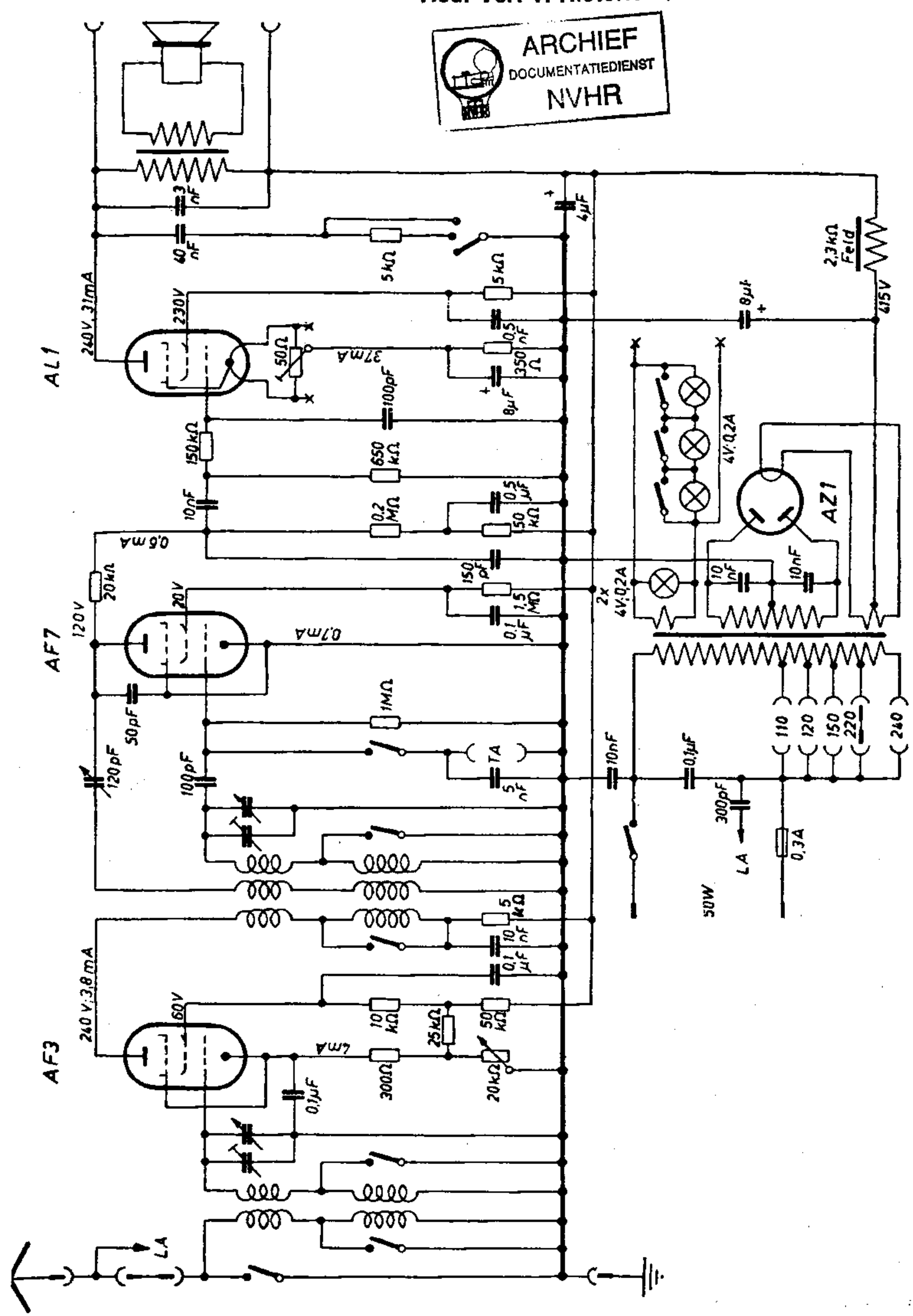
ARCHIEF
DOCUMENTATIEDIENST
NVHR