Ned. Ver. v. Historie v/d Radio
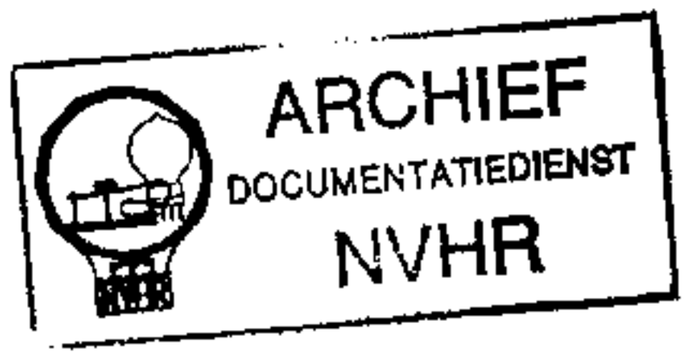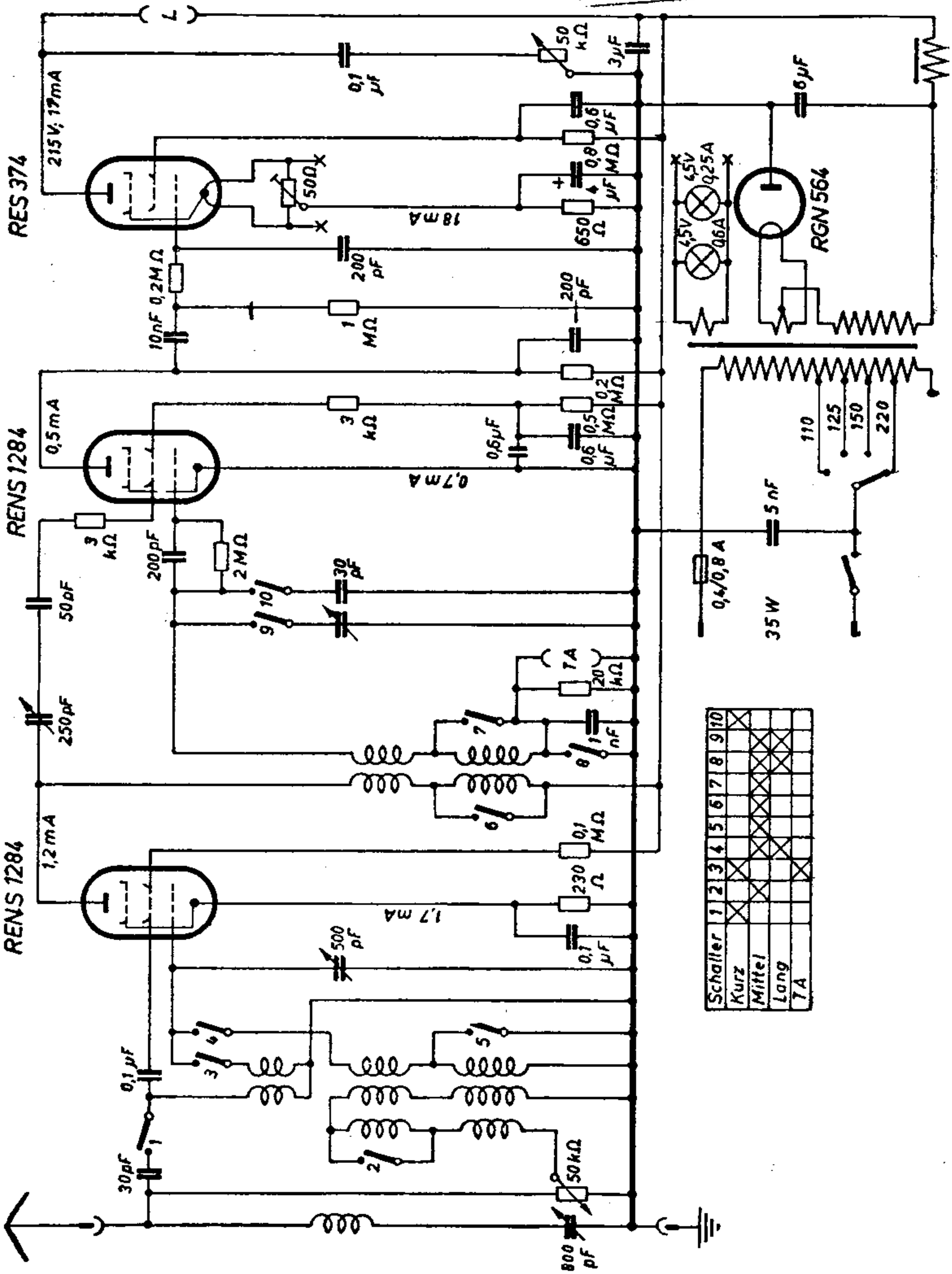
Braun Mozart W 1979