Ned. Ver. v. Historie v/d Radio

ARCHIEF
DOCUMENTATIEDIENST
NVHR

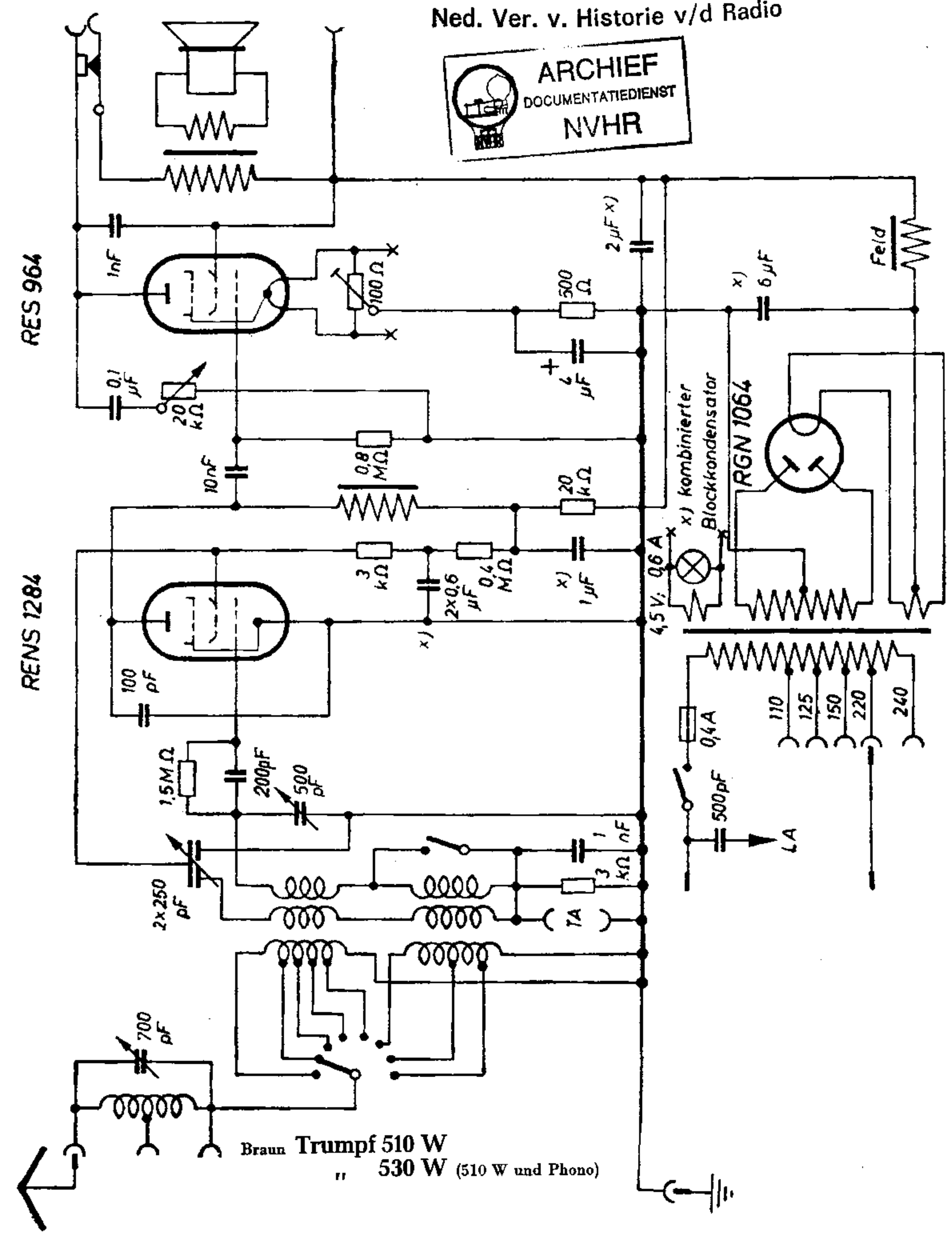

Braun Trumpf 510 W
" 530 W (510 W und Phono)