Ned. Ver. v. Historie v/d Radio

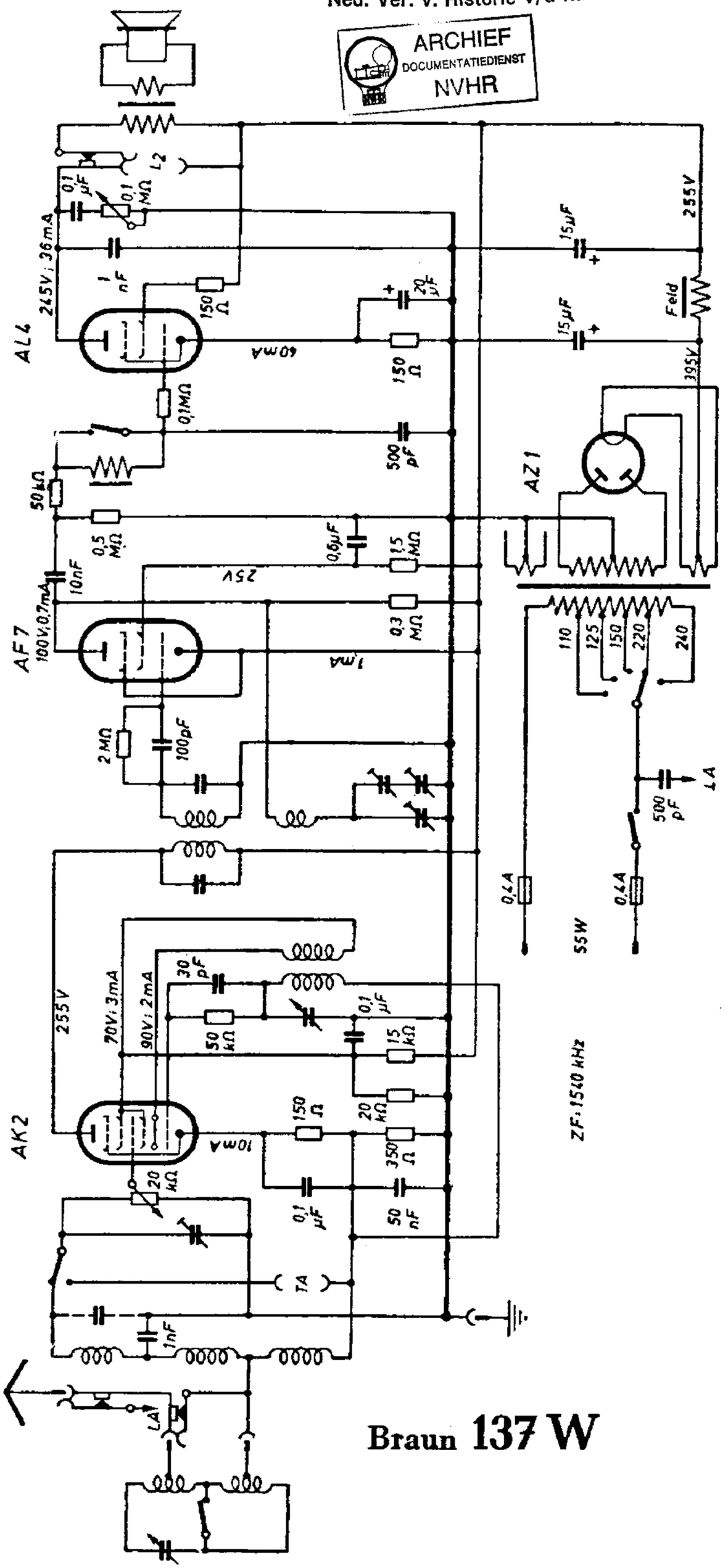

Braun 137 W