Ned. Ver. v. Historie v/d Radio

ARCHIEF
DOCUMENTATIEDIENST
NVHR

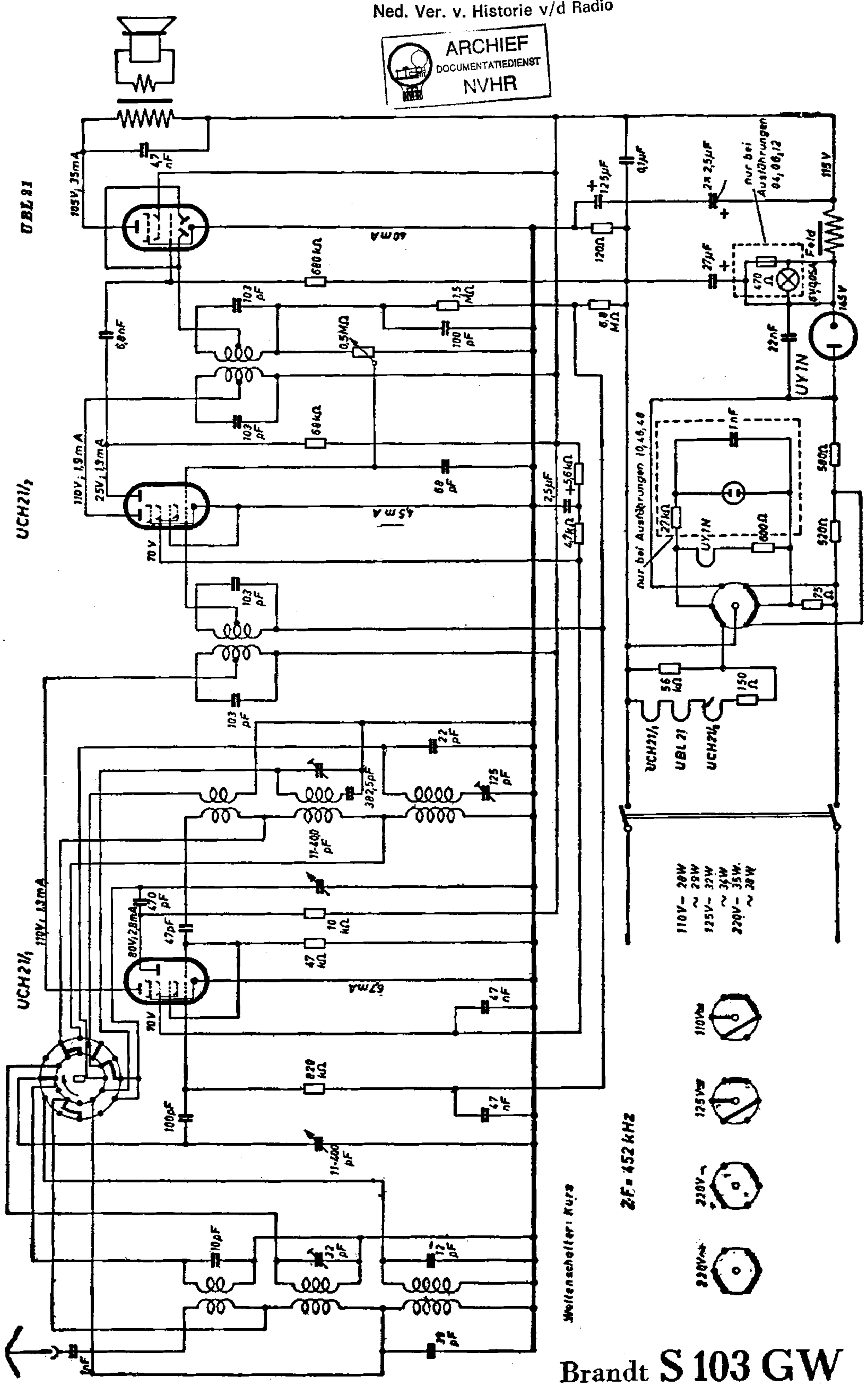

Brandt **S 103 GW**