Brandt 653/753 W

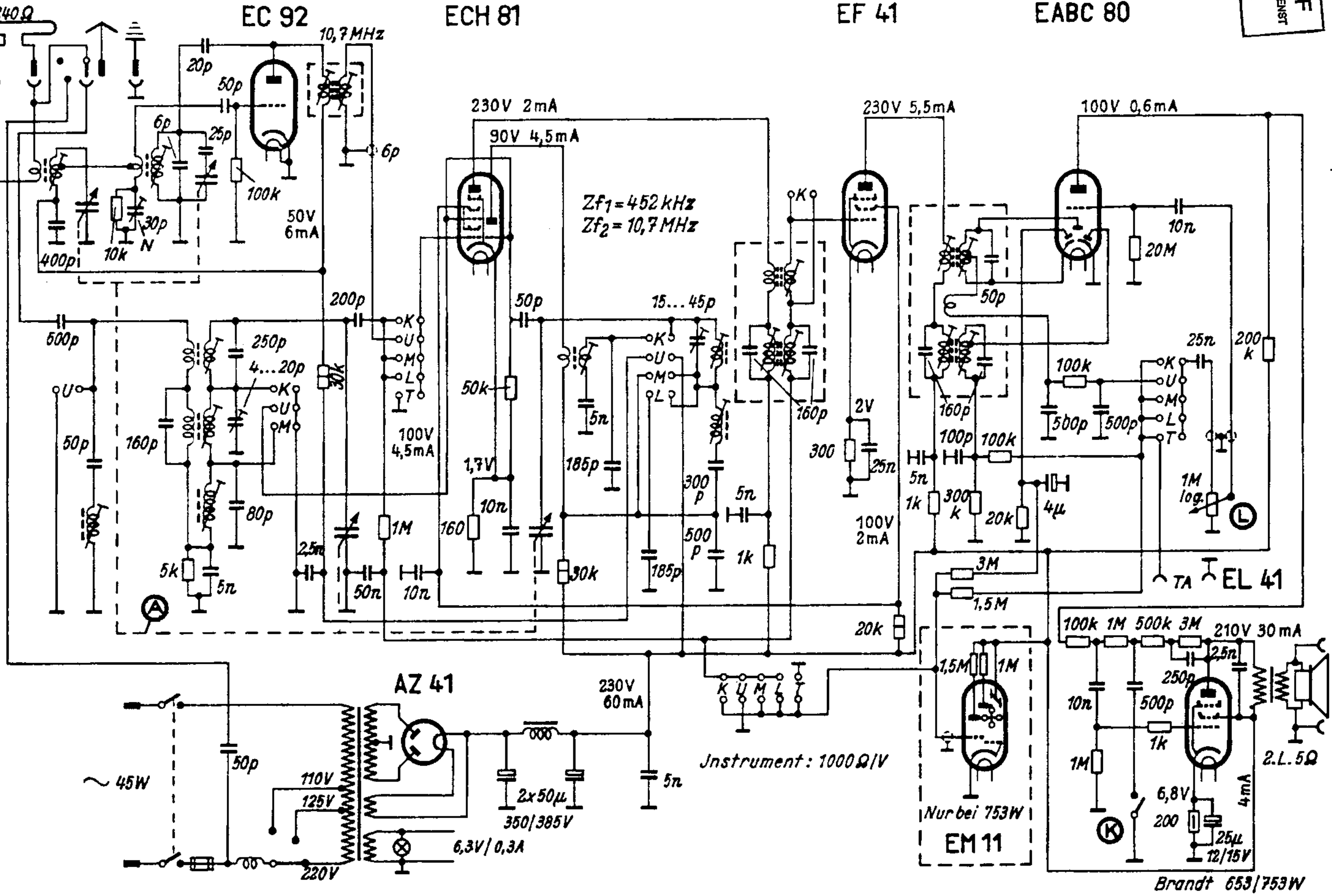

RCHIEF
UMENTATIEDIENST
NVHR

v. Historie v/d Radio Compliments Eckhard Kull