Ned. Ver. v. Historie v/d Radio
ARCHIEF
DOCUMENTATIEDIENST
NVHR

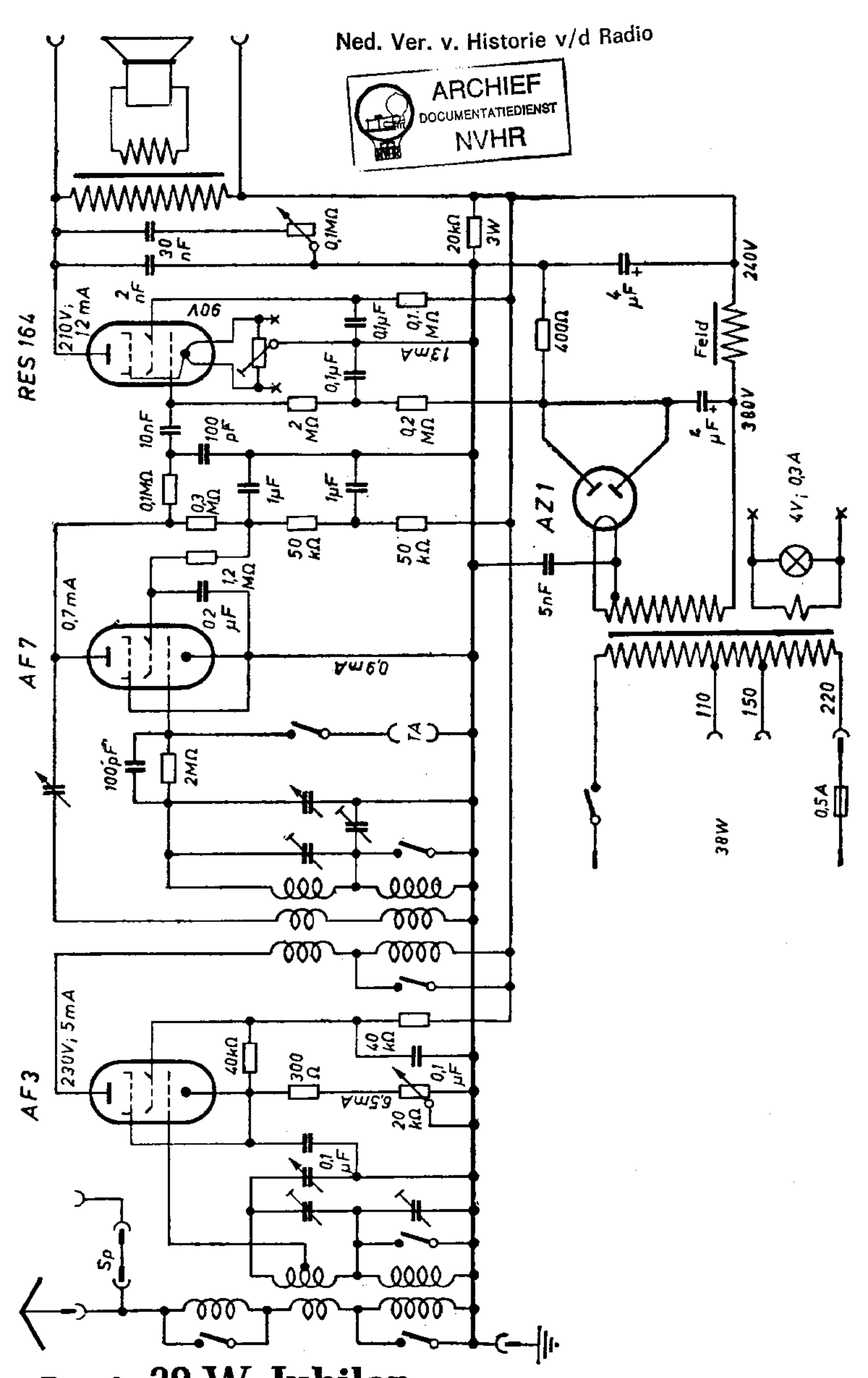

Brandt 38 W Jubilar