MODEL BR-8 SCHEMATIC DAIAGRAM

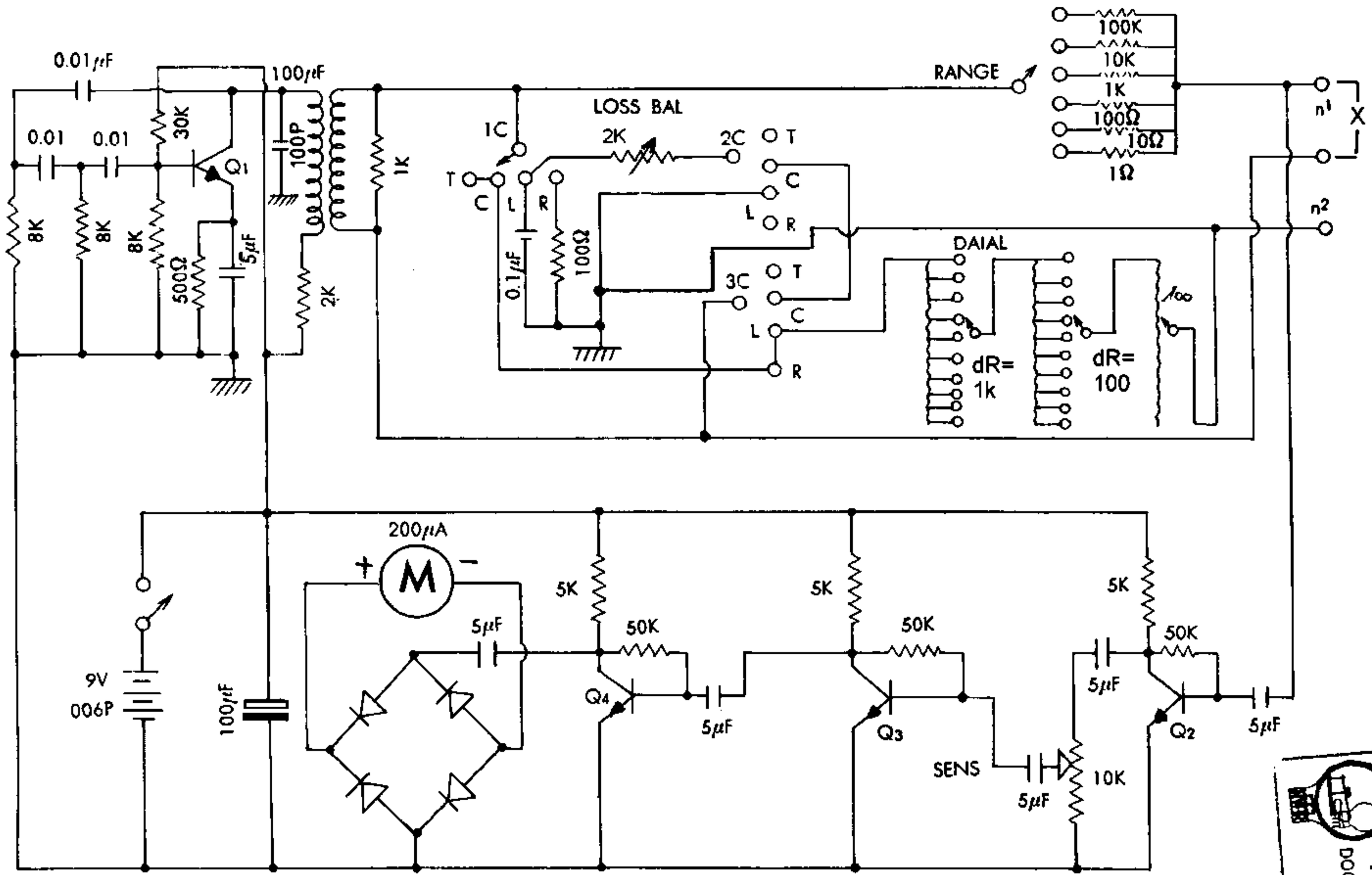

TRANSISTOR 2SC372 or Same equiv.

ARCHIEF
DOCUMENTATIEDIENST
NVHR