Becker Solitude 2

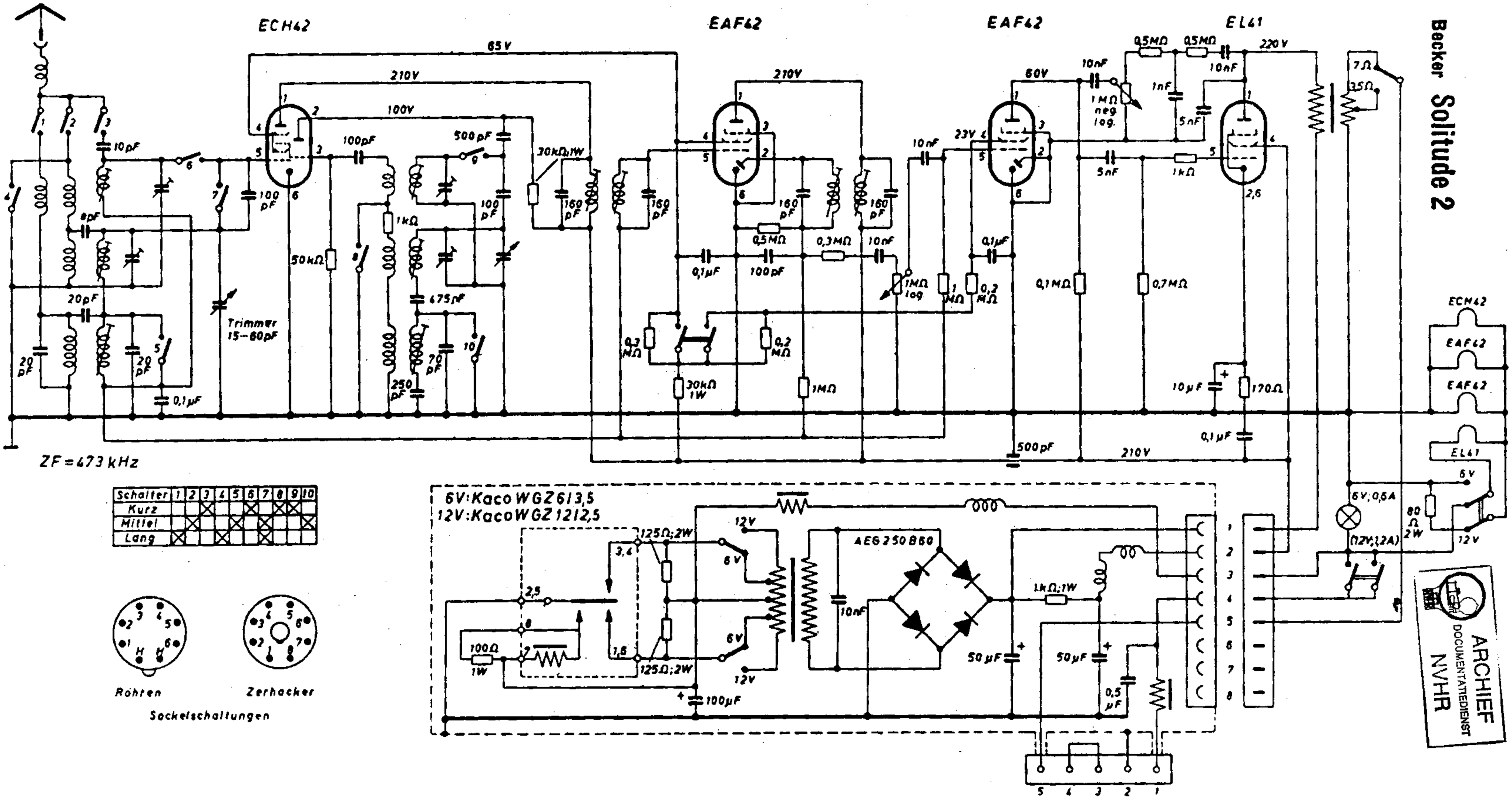

Schalter	1	2	3	4	5	6	7	8	9	10
Kurz			X			X		X	X	
Mittel		X			X		X			X
Lang	X			X			X			

ARCHIEF DOCUMENTATIEDIENST NVHR

Ned. Ver. v. Historie v/d Radio