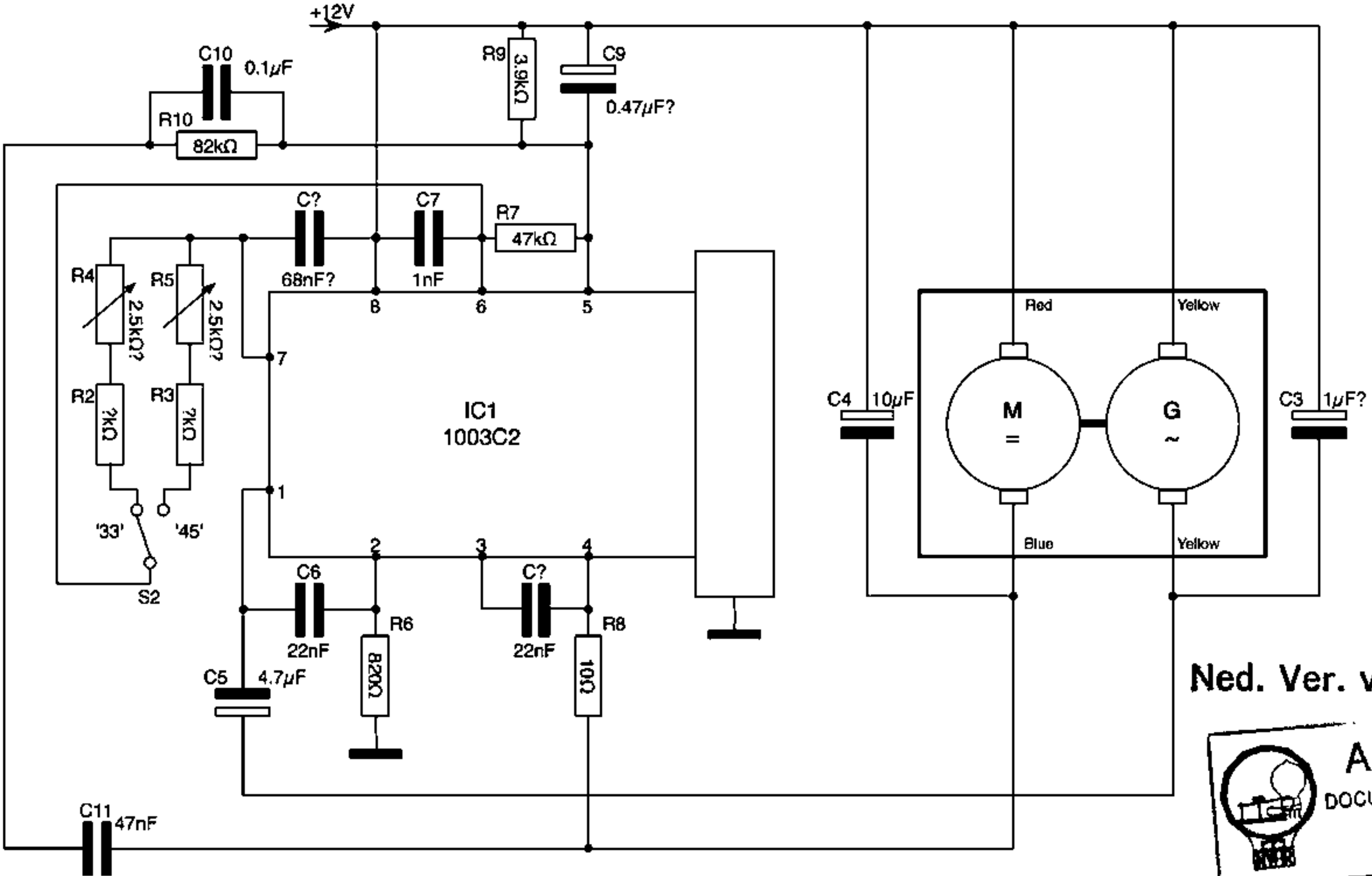

Ned. Ver. v.

AR
DOCU