Ned. Ver. v. Historie v/d Radio

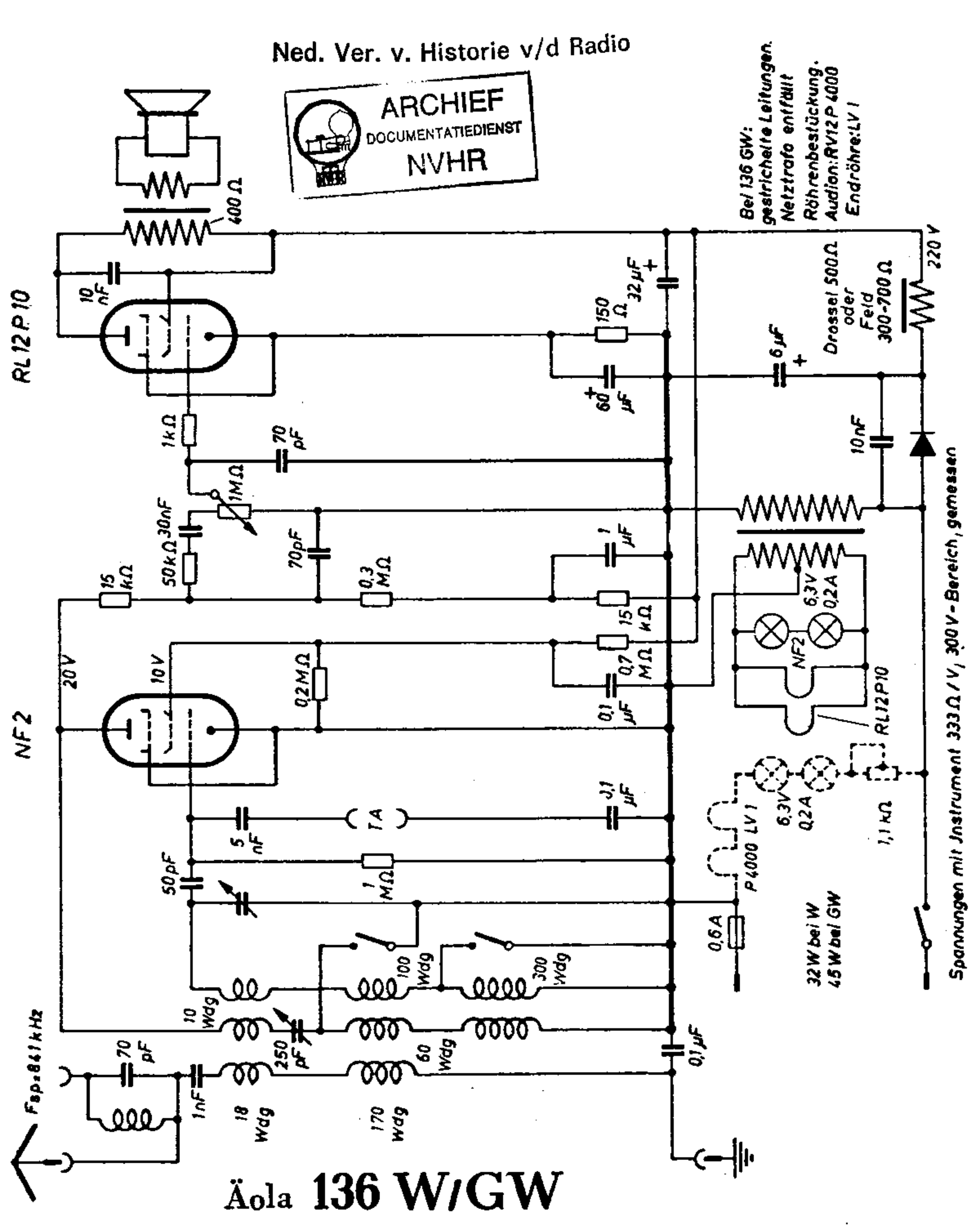

Äola 136 W/GW