AEG Polyfarette

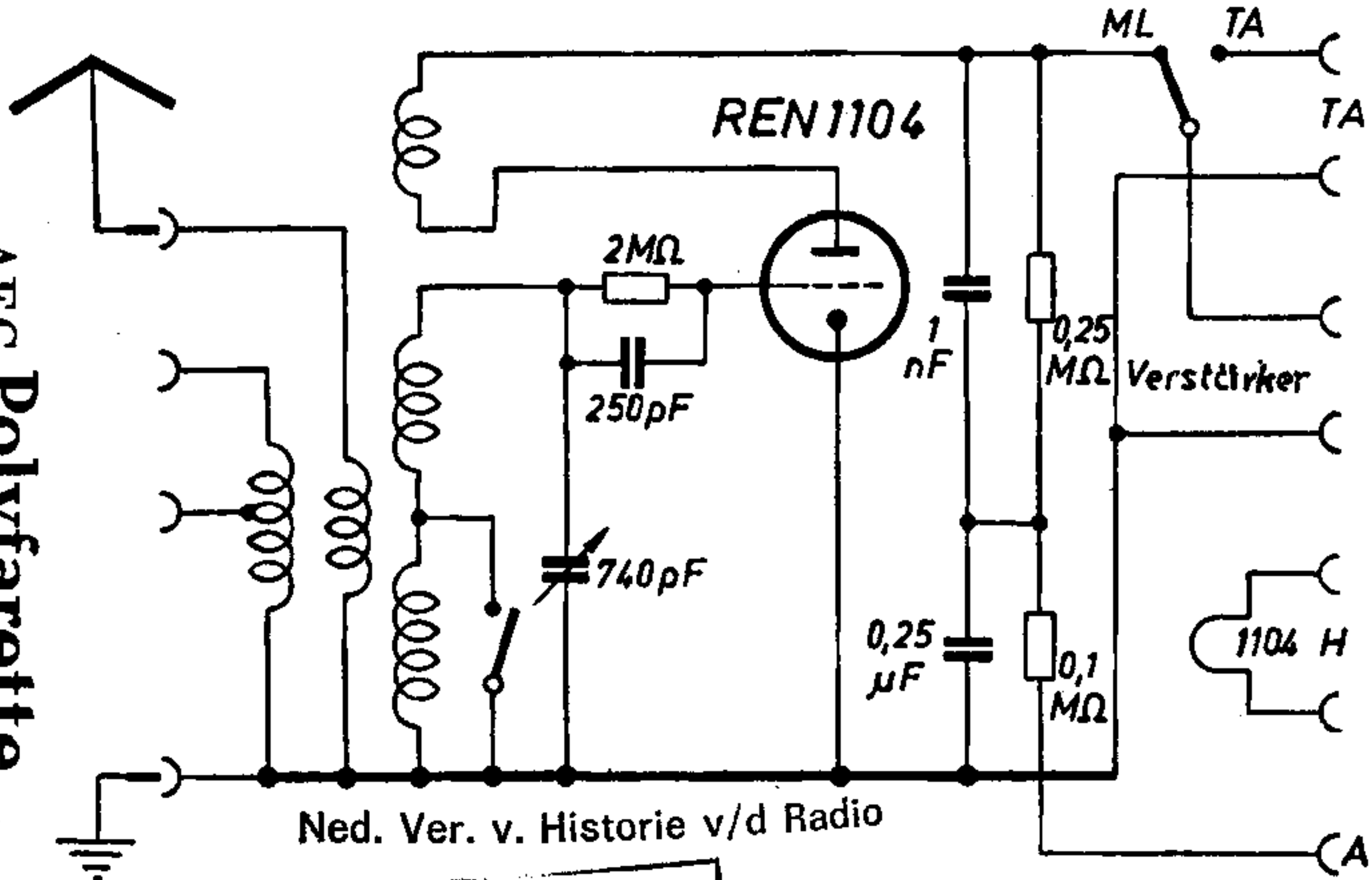

Ned. Ver. v. Historie v/d Radio