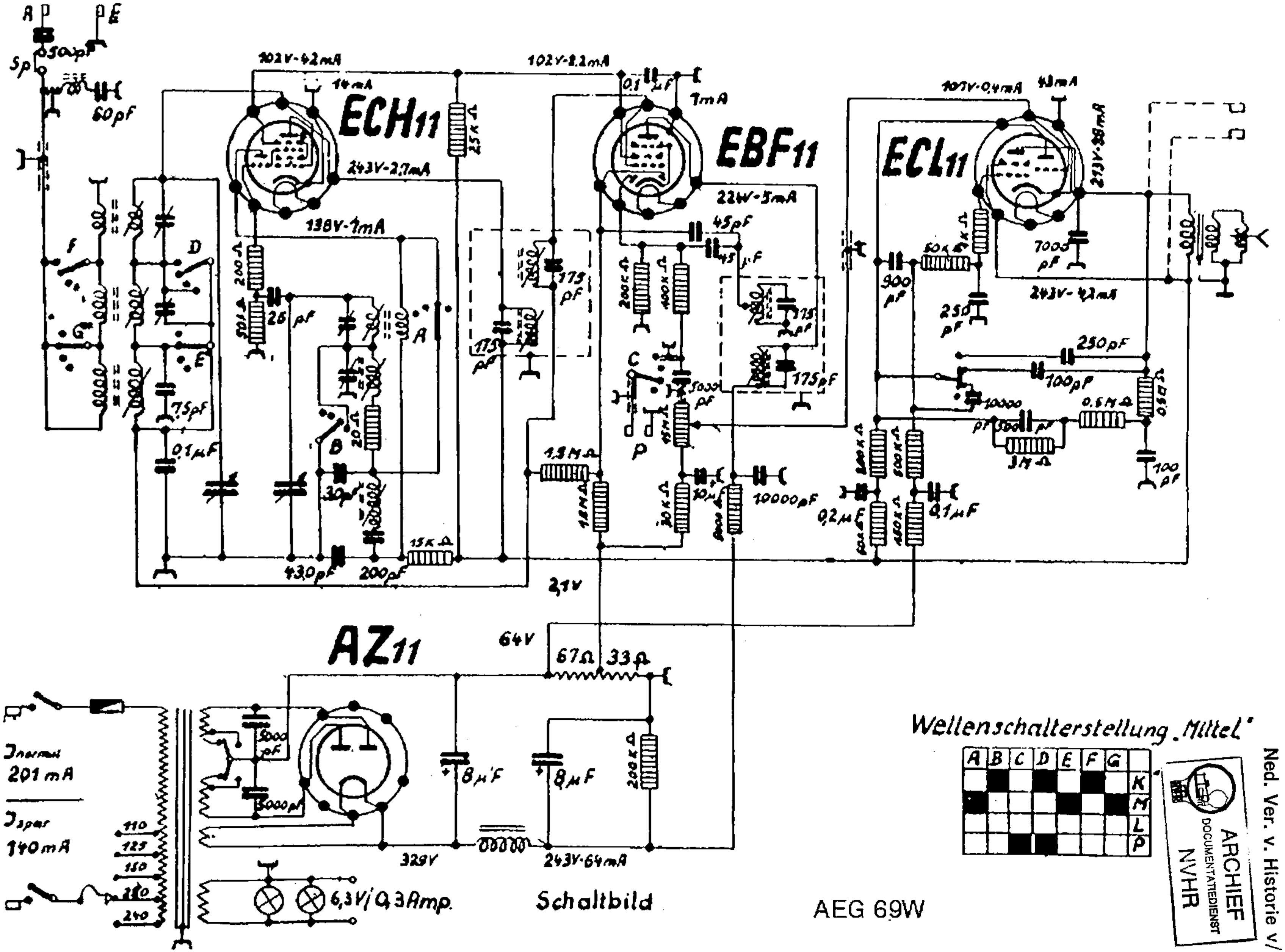

ARCHIEF
DOCUMENTATIEDIENST
NVHR

Ned. Ver. v. Historie v/