AEG Ultra-Geadem 304GL

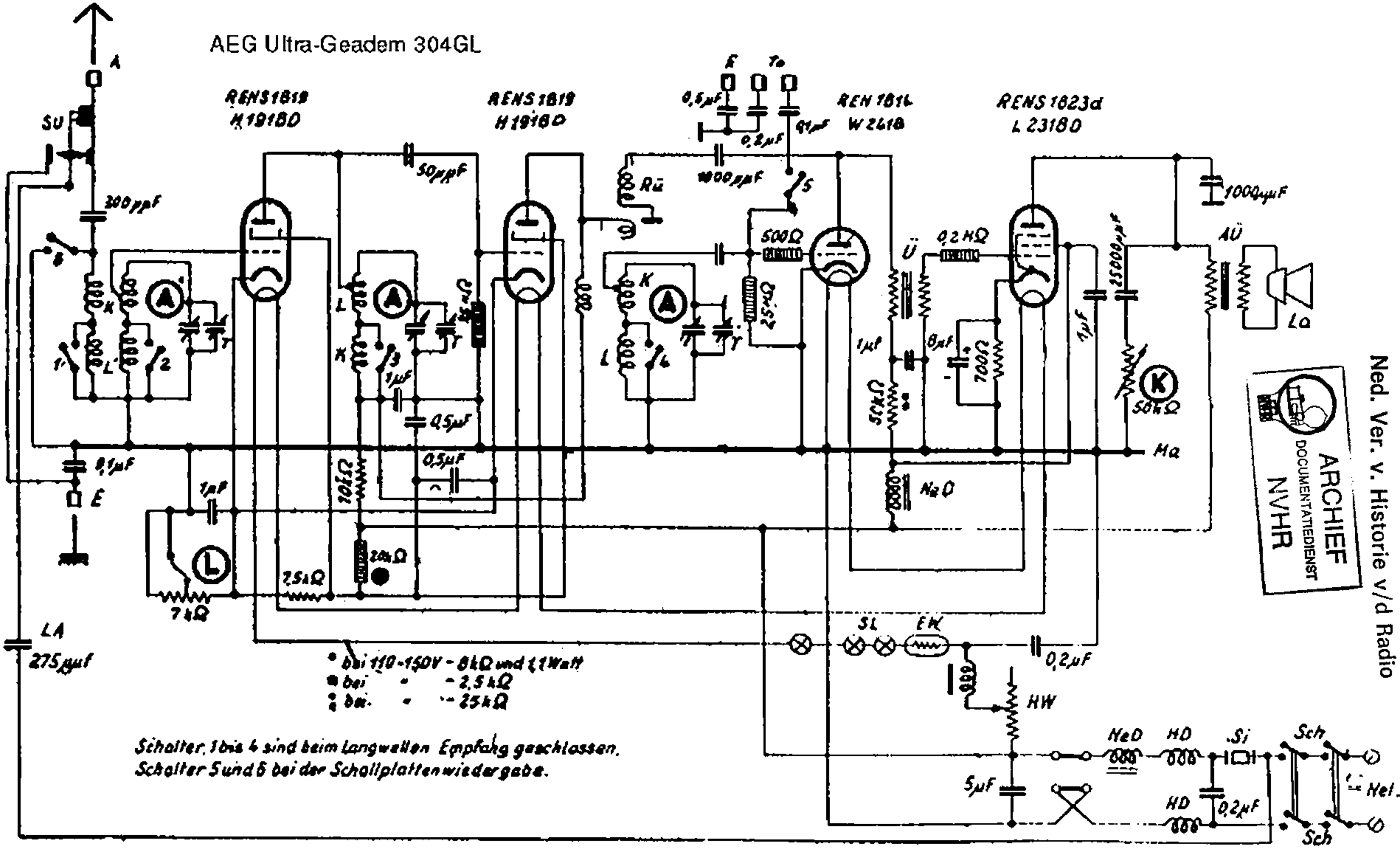

ARCHIEF
DOCUMENTATIEDIENST
NVHR

Ned. Ver. v. Historie v/d Radio